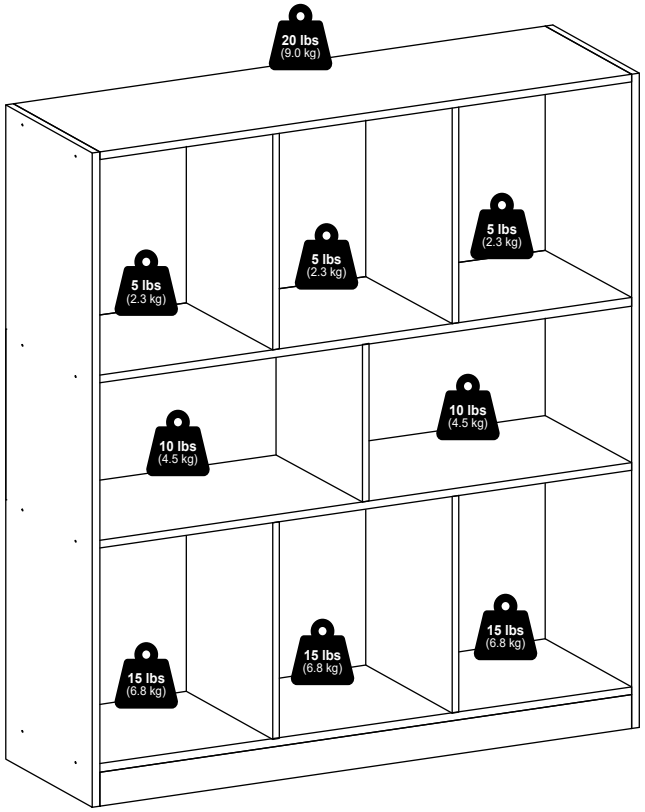

Furinno®

Fits Space, Fits Budget



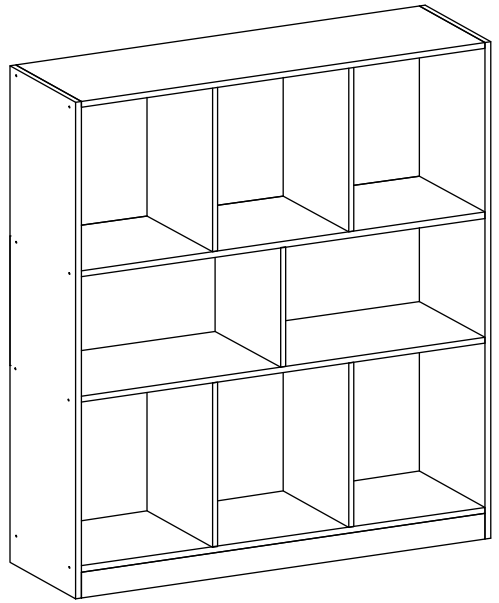

MODEL: 24121

support@furinno.com

www.furinno.com

2412120241227

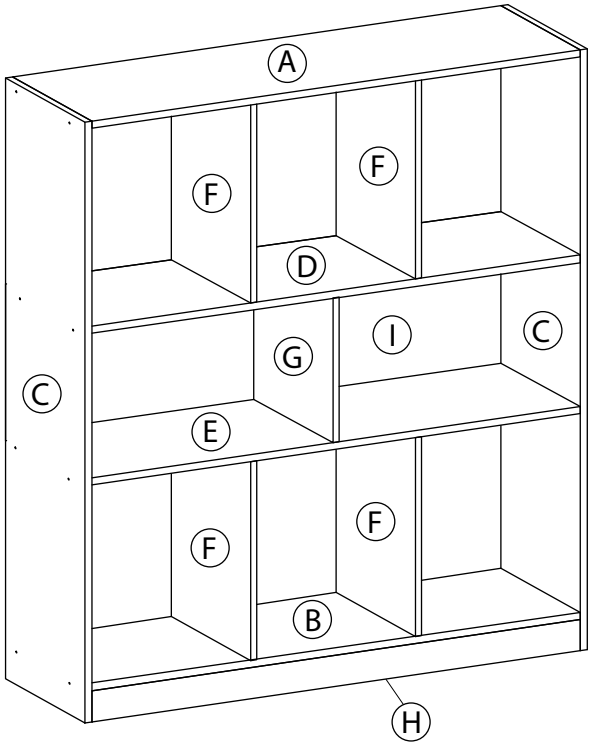

1 x 10 M8 x 24mm	**2** x 10 12mm	**3** x 3 17 x 22mm	**4** x 6 M4 x 11mm
5 x 26 M4 x 32mm	**6** x 20 4.0 x 20mm	**7** x 2 7a 16 x 28mm 7b 1/1/4" 7c #8 x 1" 7d M4 x 11mm	**8** x 1

9

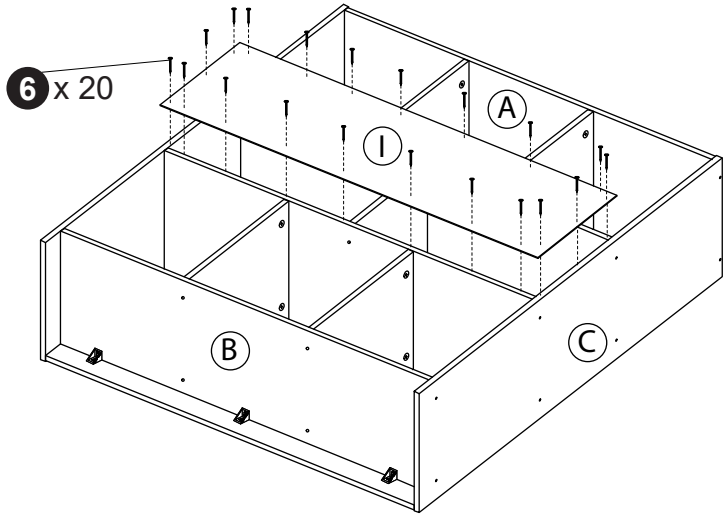

10

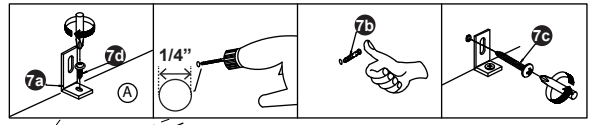

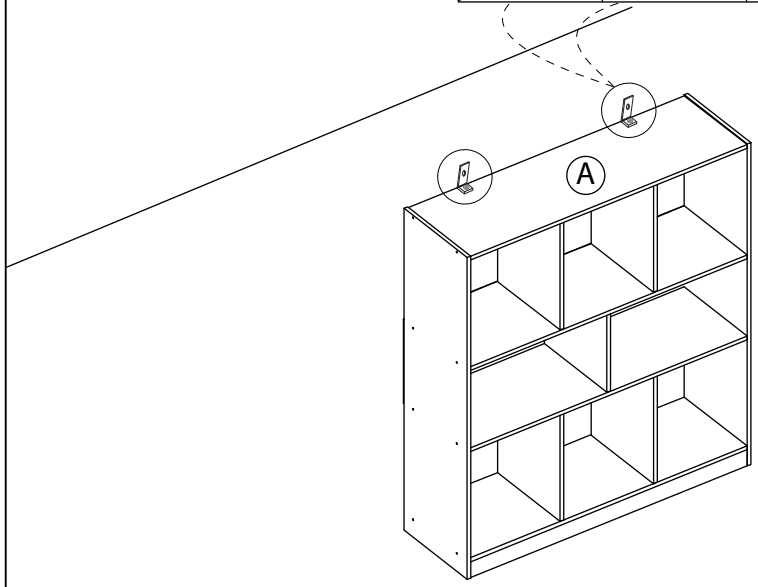

7

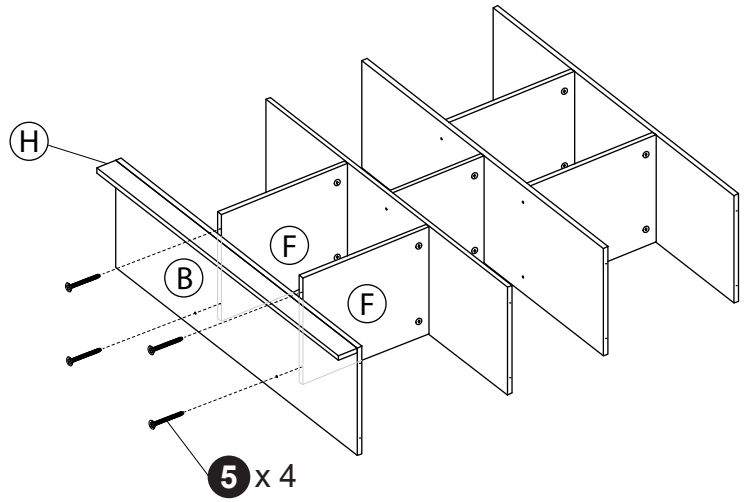

8

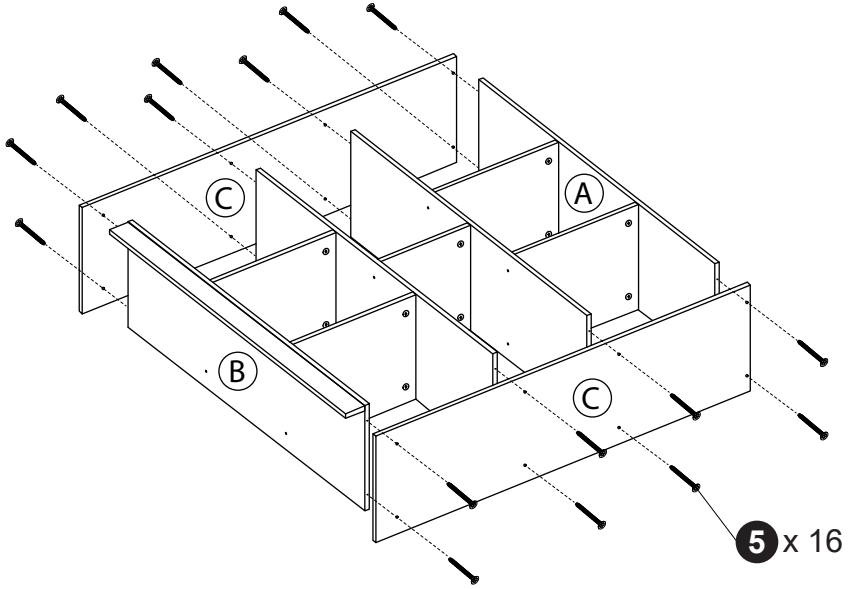

1

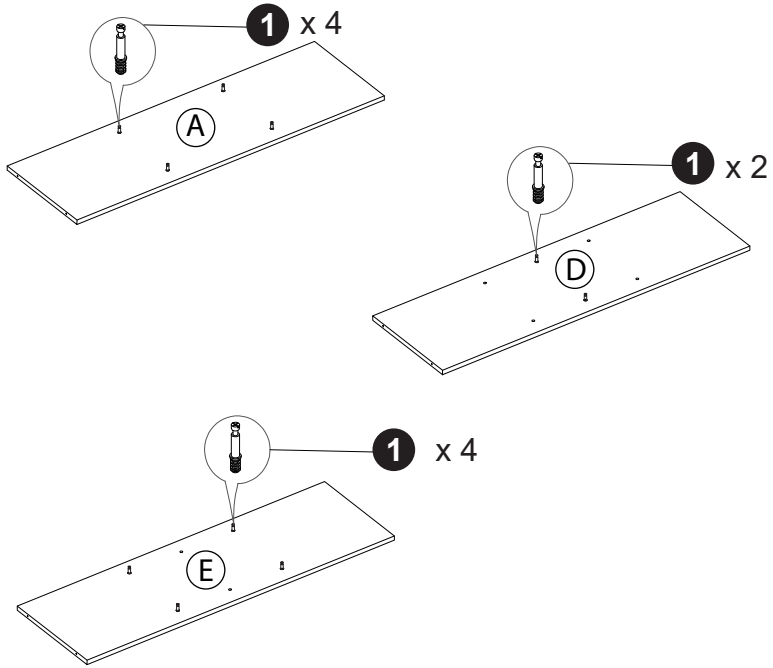

2

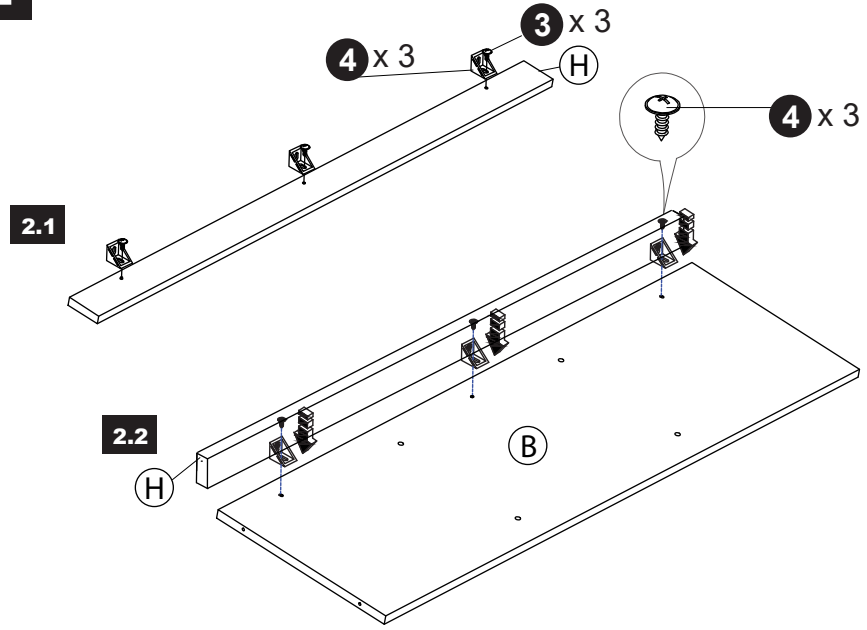

3

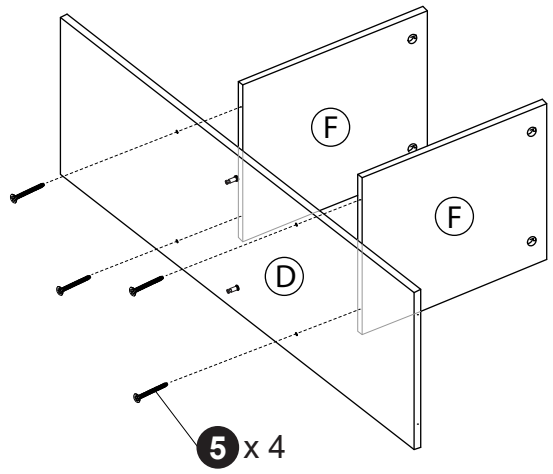

4

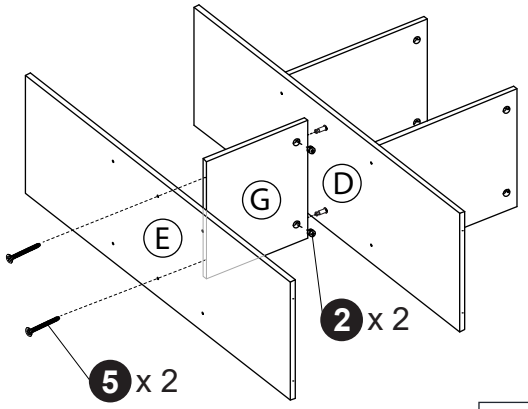

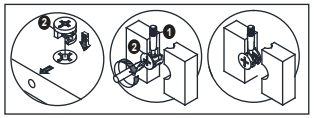

5

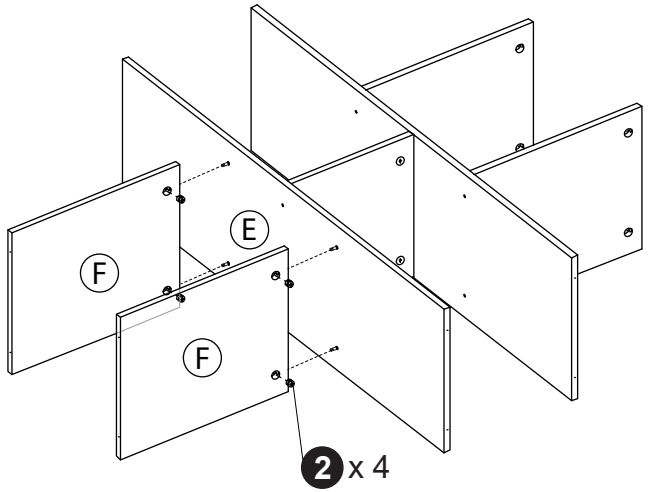

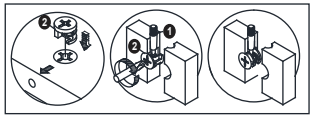

6

