Furinno®

Fits Space, Fits Budget



00:30



x 1

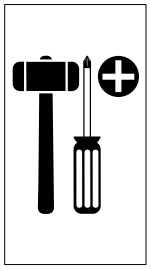

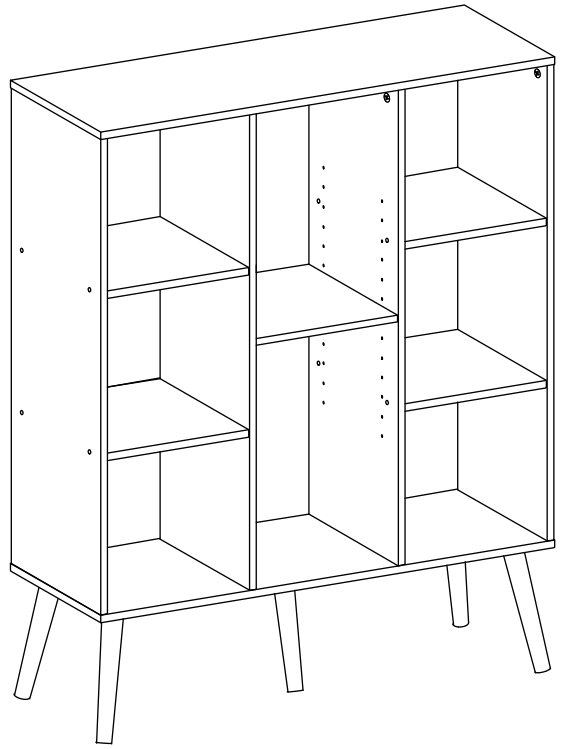

MODEL: 24122



support@furinno.com



www.furinno.com

2412220241224

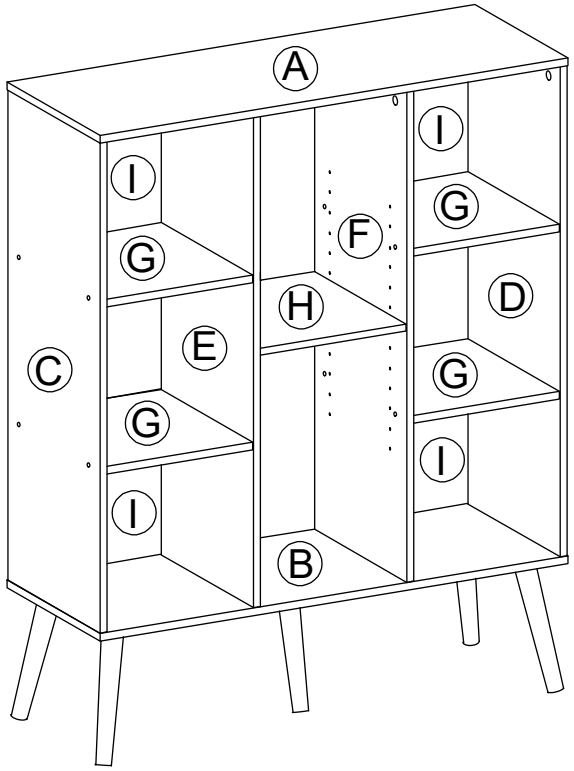

1 x 24  M4 x 32mm	**2** x 8  15mm	**3** x 8 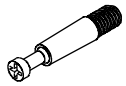 6 x 31 mm	**4** x 40 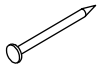 4 x 20 mm
5 x 1 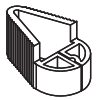	**6** x 2  6a 16 x 28mm 6b 1/1/4" 6c #8 x 1" 6d 4 x 11 mm	**7** x 25  M4 x 11mm	
8 x 5 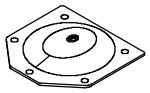	**9** x 5  33.5 x 198 mm	**10** x 4  5 x 6 x 16mm	

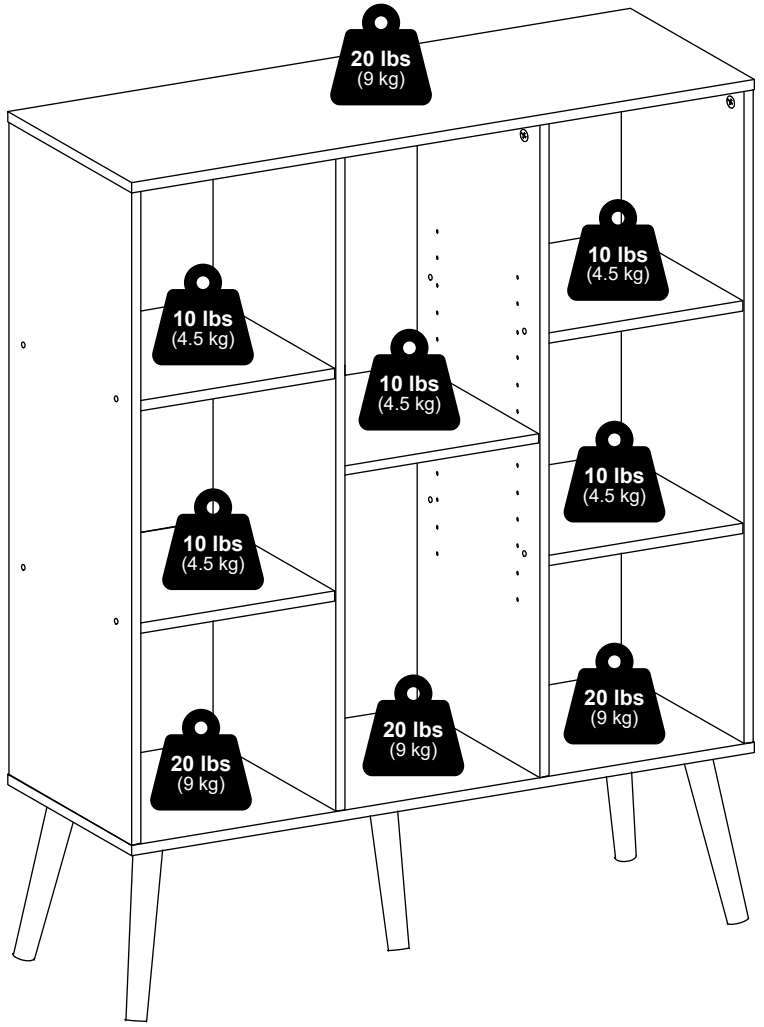

7

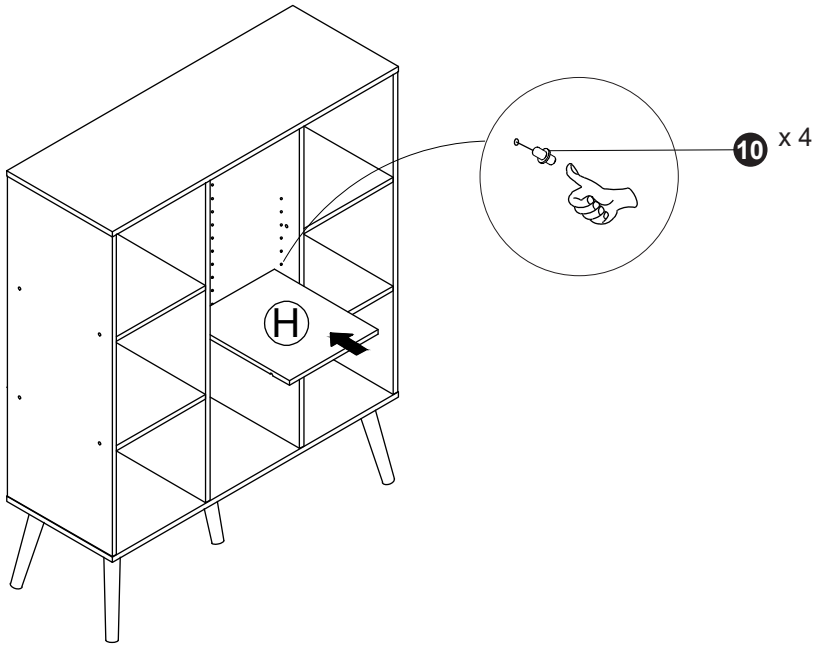

8

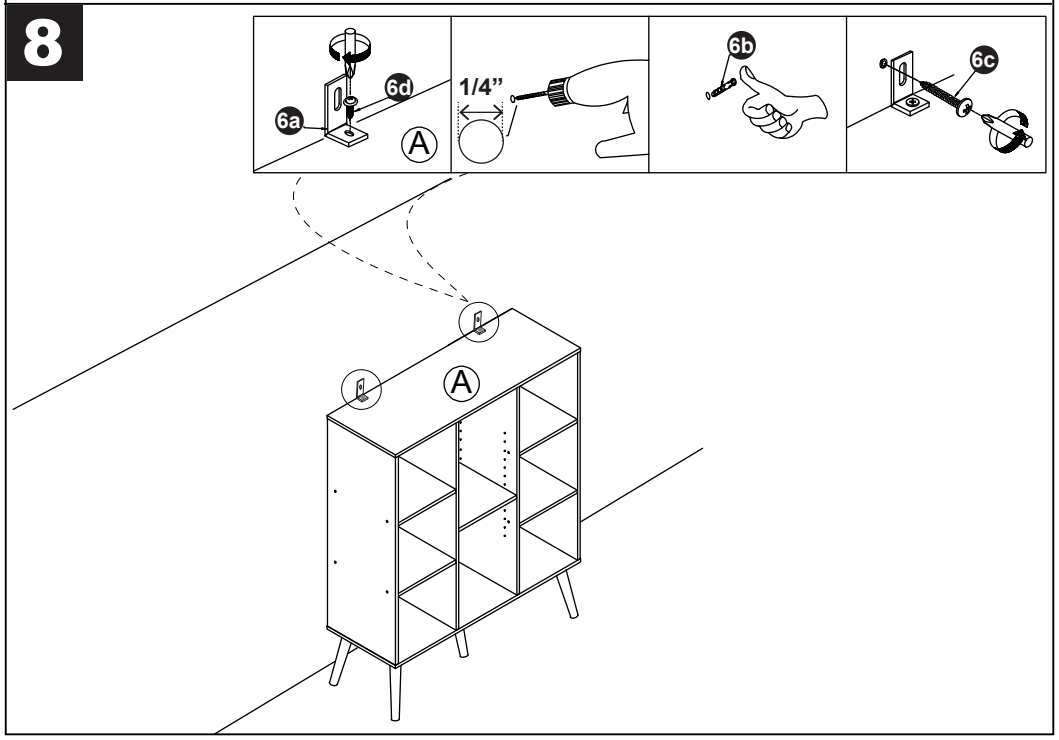

1

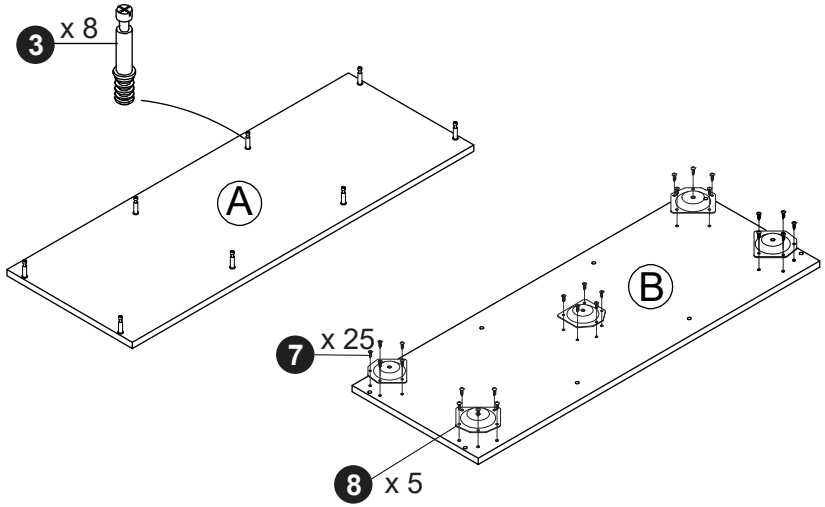

2

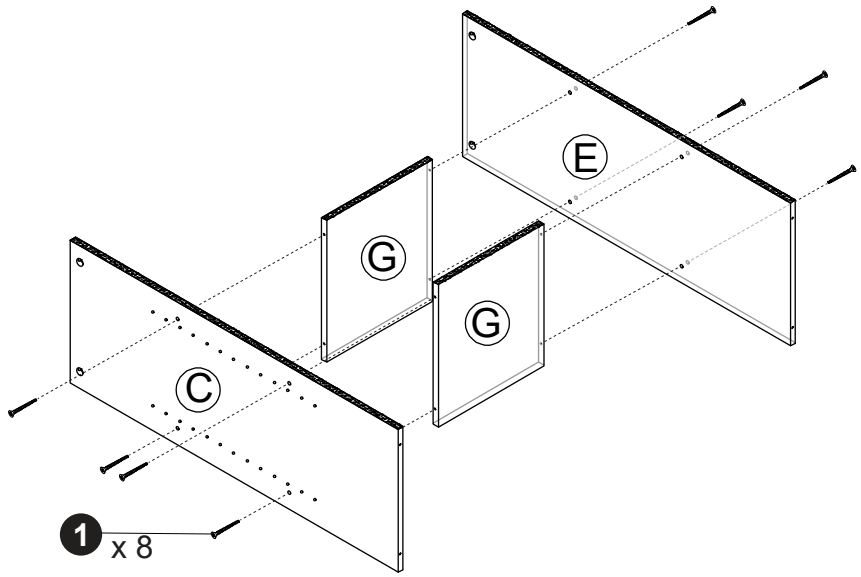

3

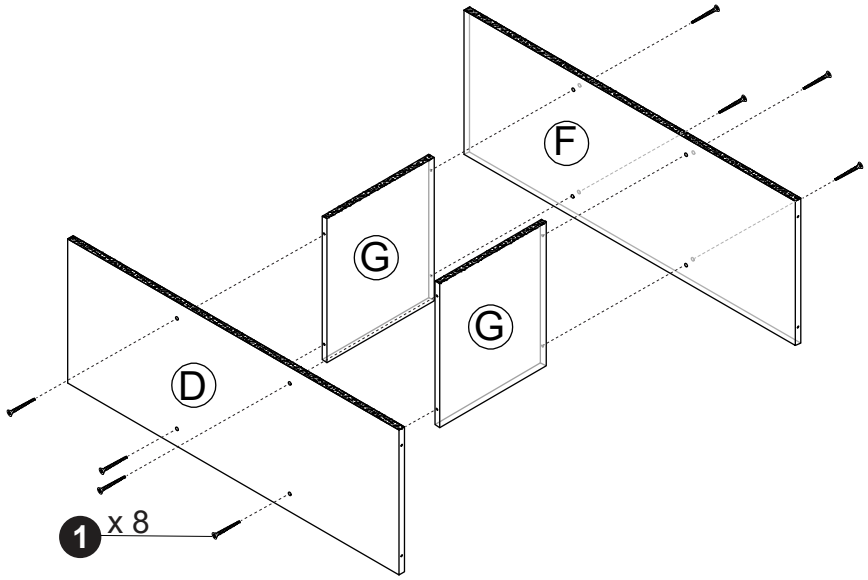

4

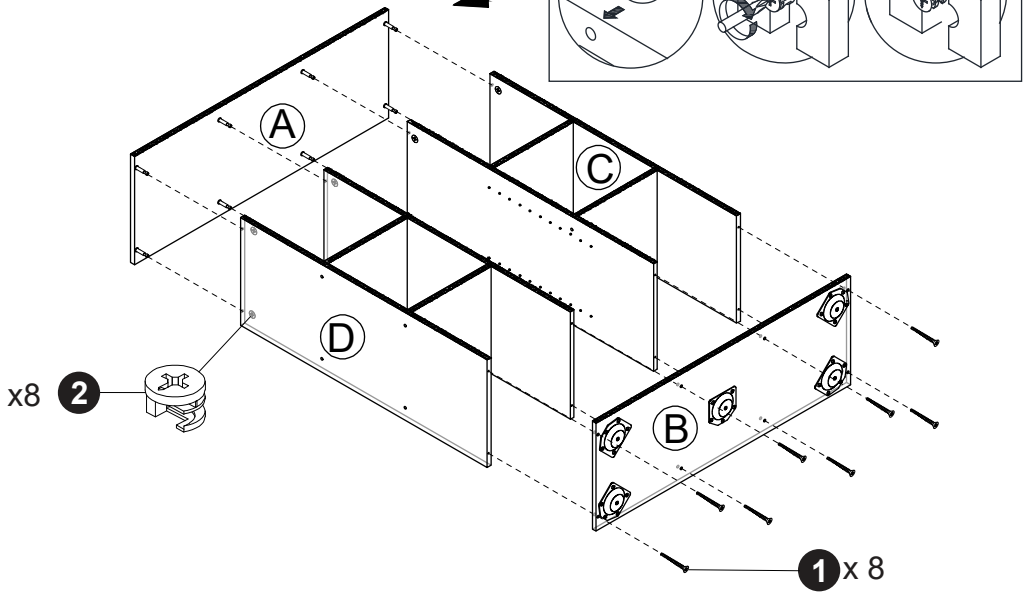

5

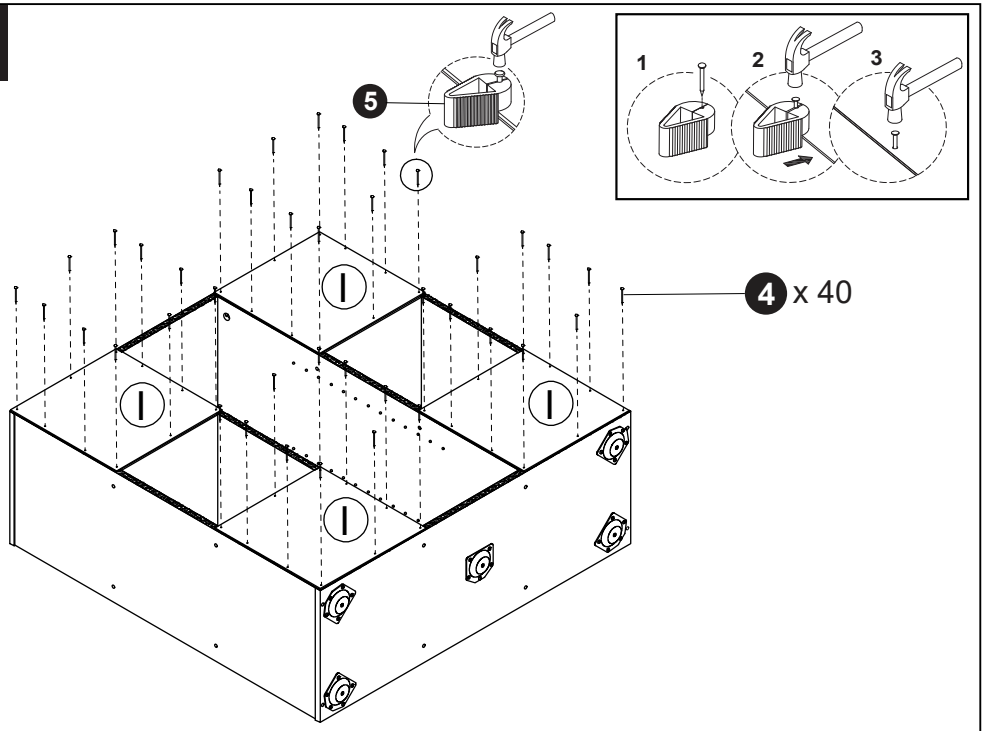

6

