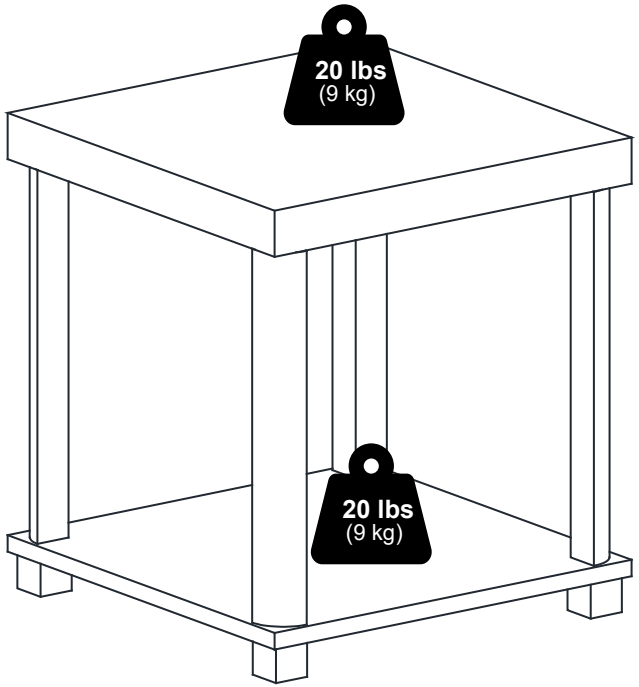

Furinno®

Fits Space, Fits Budget





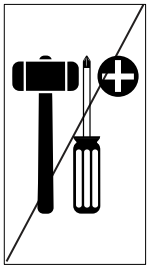

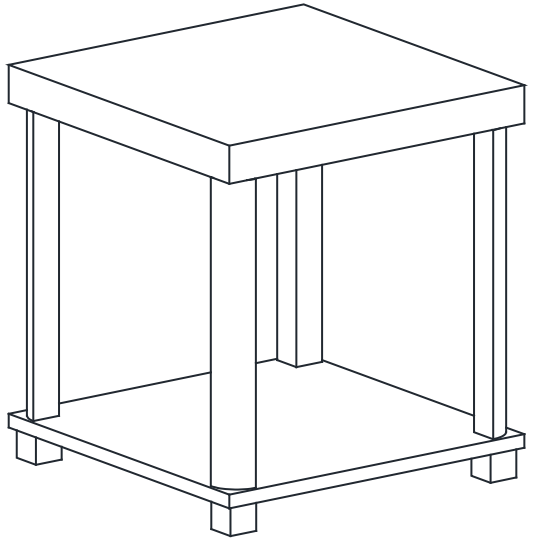

MODEL: 24150

support@furinno.com

www.furinno.com

2415020240520

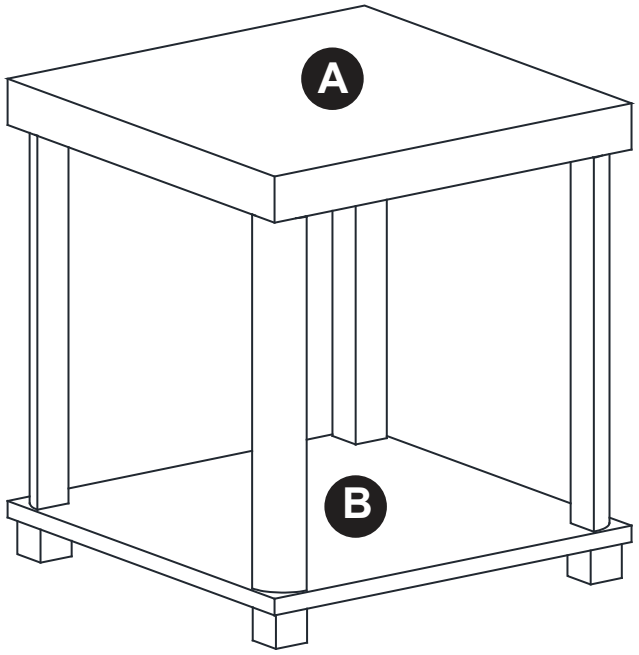

1	x 4	2	x 4
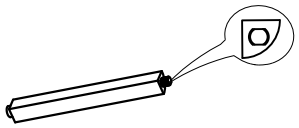		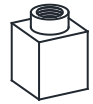	
34 x 340mm		Ø34 x 38mm	

1

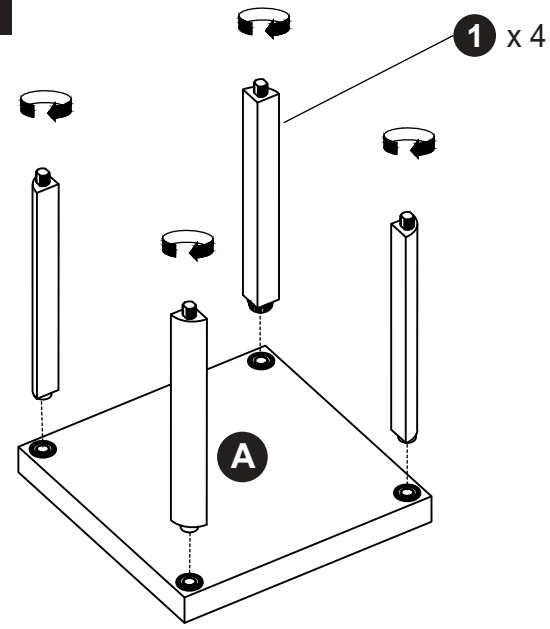

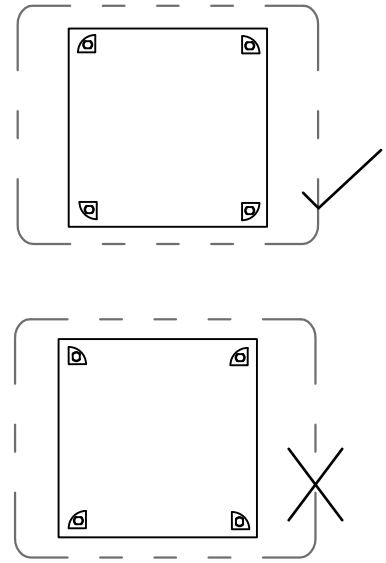

2

