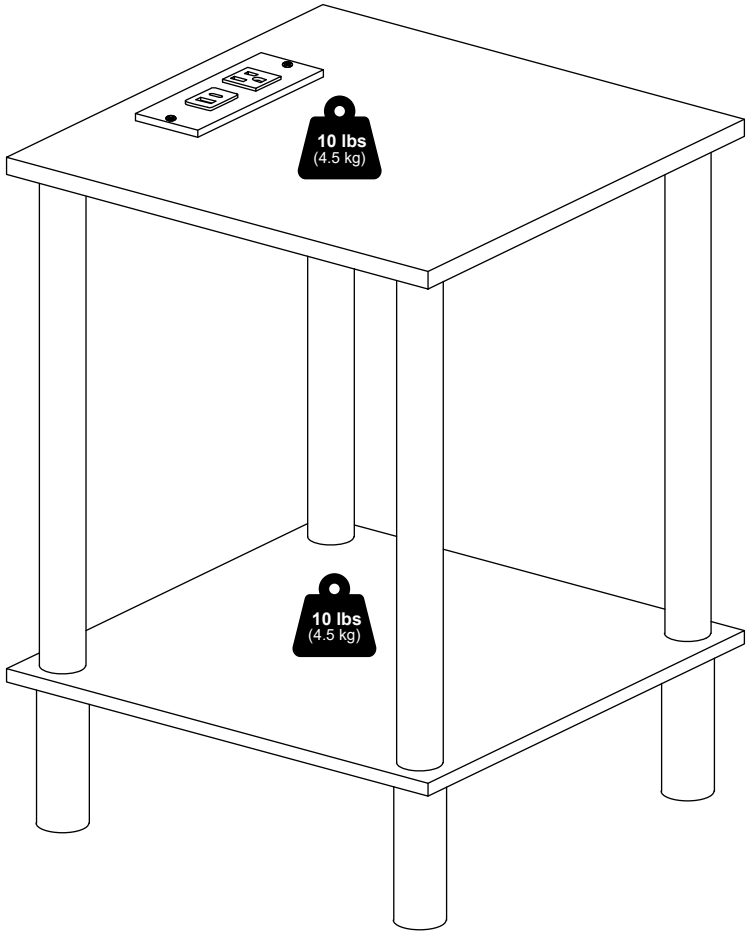





Furinno®

Fits Space, Fits Budget



00:10

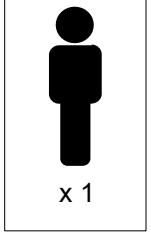

x 1

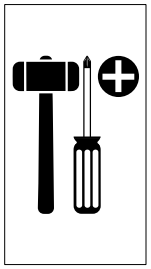

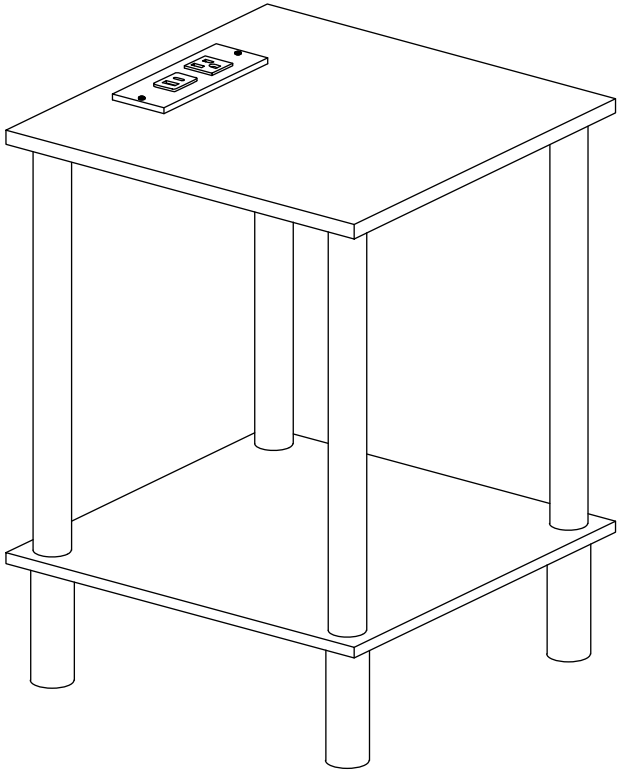

MODEL: 24203

support@furinno.com

www.furinno.com

2420320240819

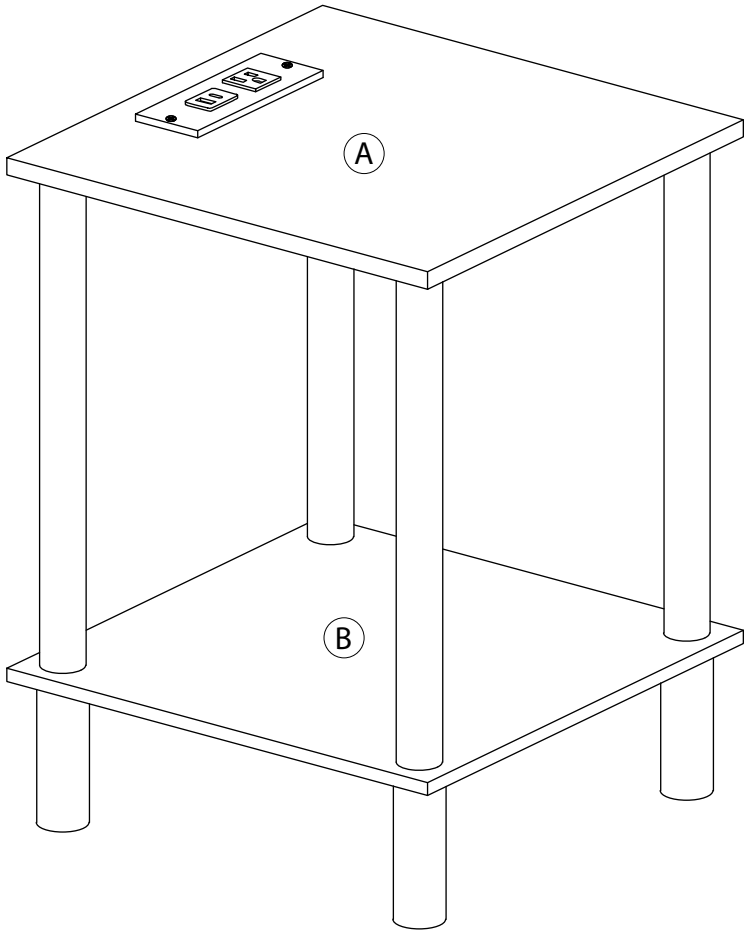

1 x 4	2 x 4	3 x 1	4 x 2
340mm	100mm	126 x 50 x 44mm	M3.5 x 12mm

1

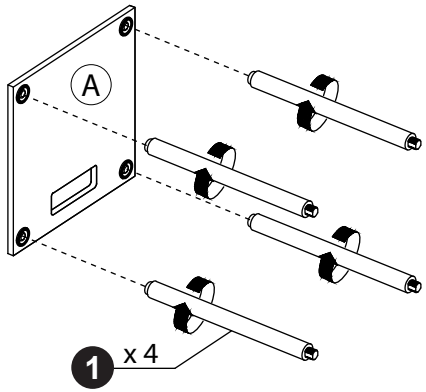

2

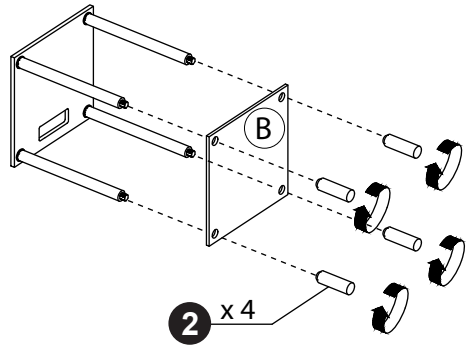

3

