



Furinno®

Fits Space, Fits Budget





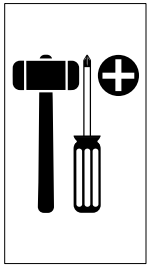

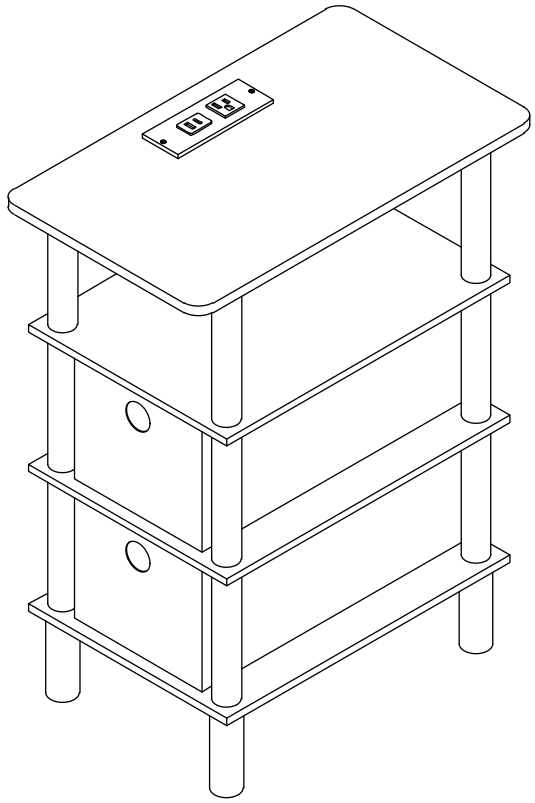

MODEL: 24204

support@furinno.com

www.furinno.com

2420420240819

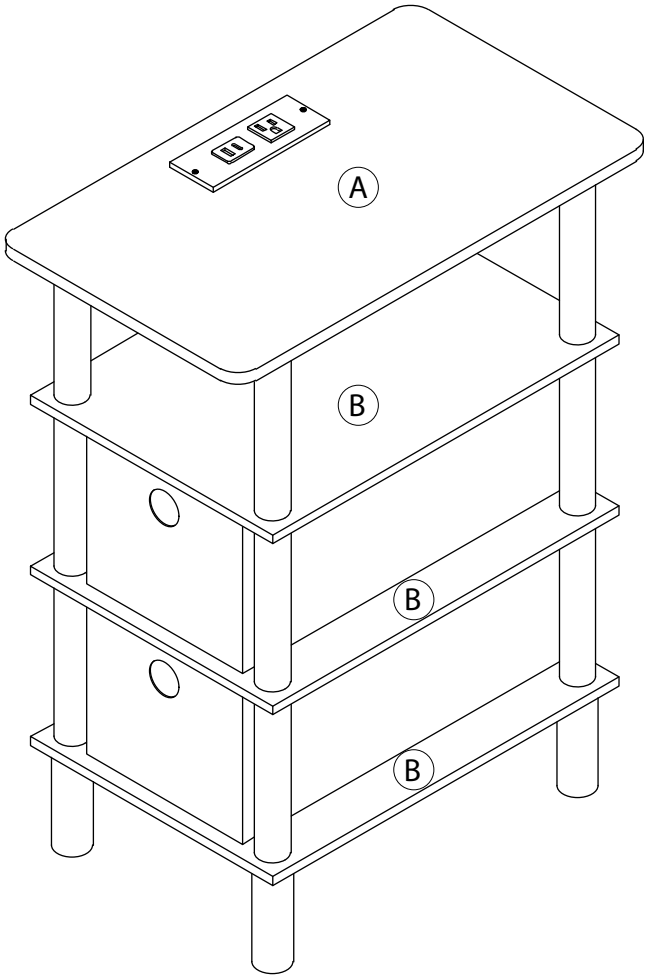

1 x 12	2 x 4	3 x 1	4 x 2	5 x 2
				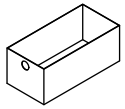
162mm	100mm	126 x 50 x 44mm	M3.5 x 12mm	180L x 370W x 150H

1

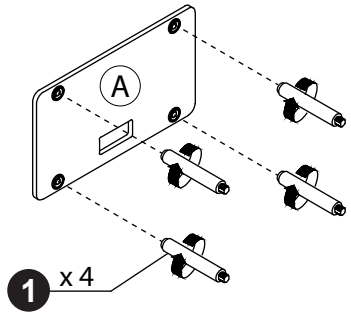

2

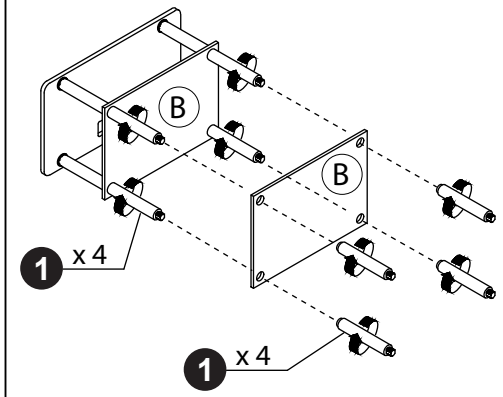

3

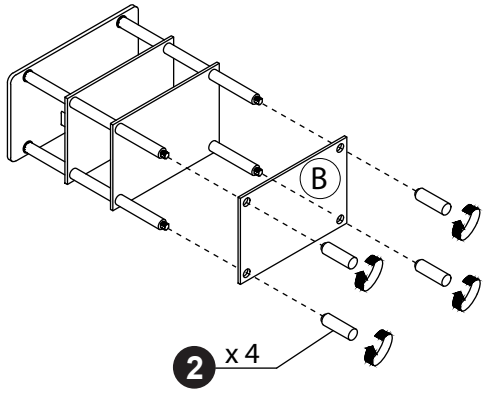

4

