3

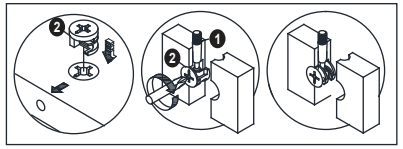

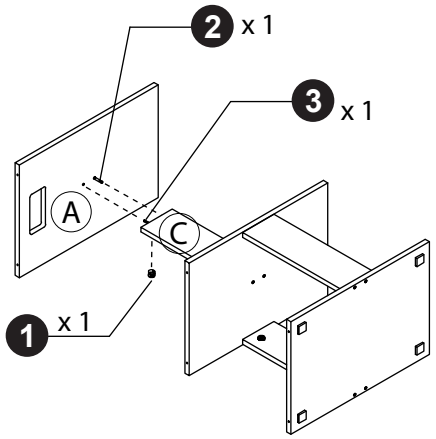

4

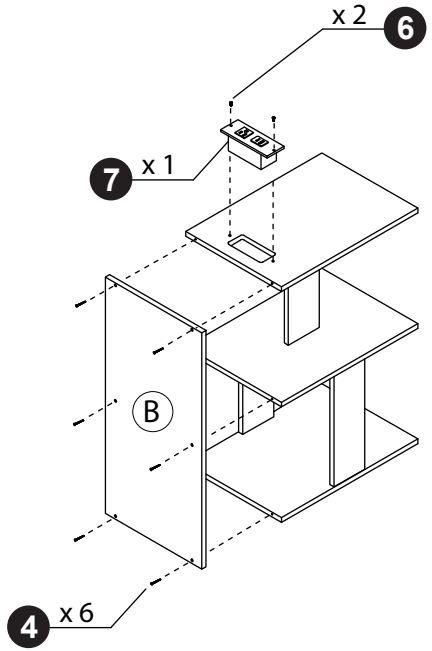

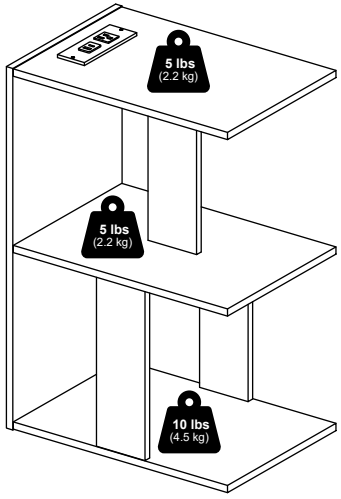



Furinno®

Fits Space, Fits Budget



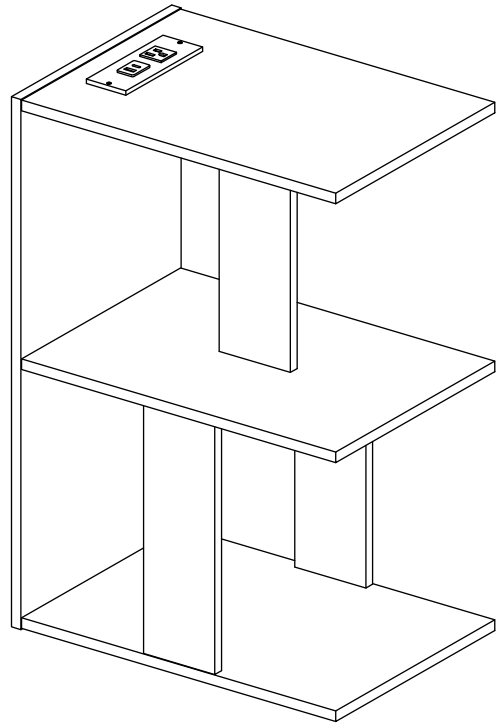

MODEL: 24217

support@furinno.com

www.furinno.com

2421720240821

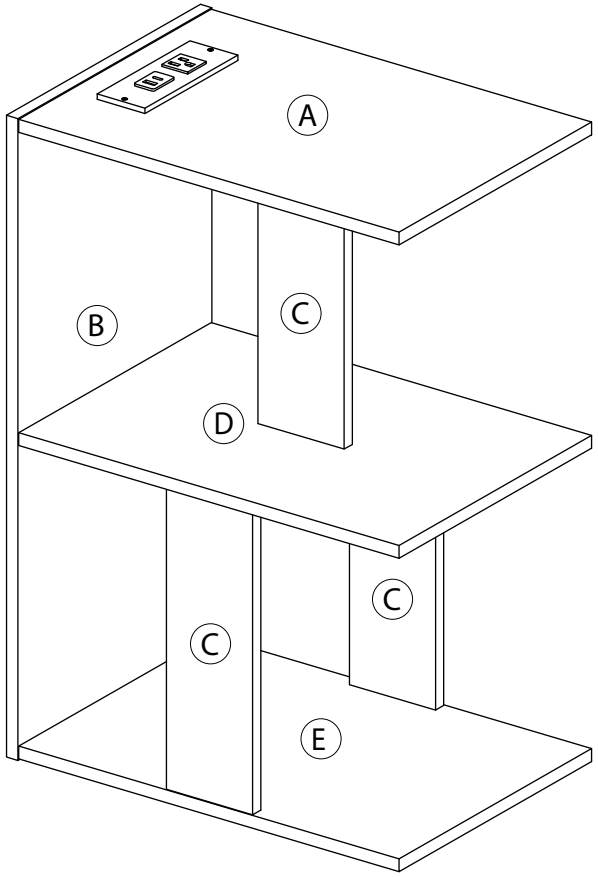

1 x 3  M15x 11mm	2 x 3 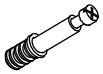 8 x 24mm	3 x 3 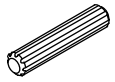 M6 x 30mm	4 x 12  M4 x 32mm
5 x 4  20 x 20 x 4mm	6 x 2  M4 x 12mm	7 x 1 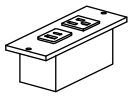 126 x 50 x 44mm	

1

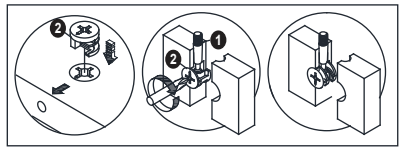

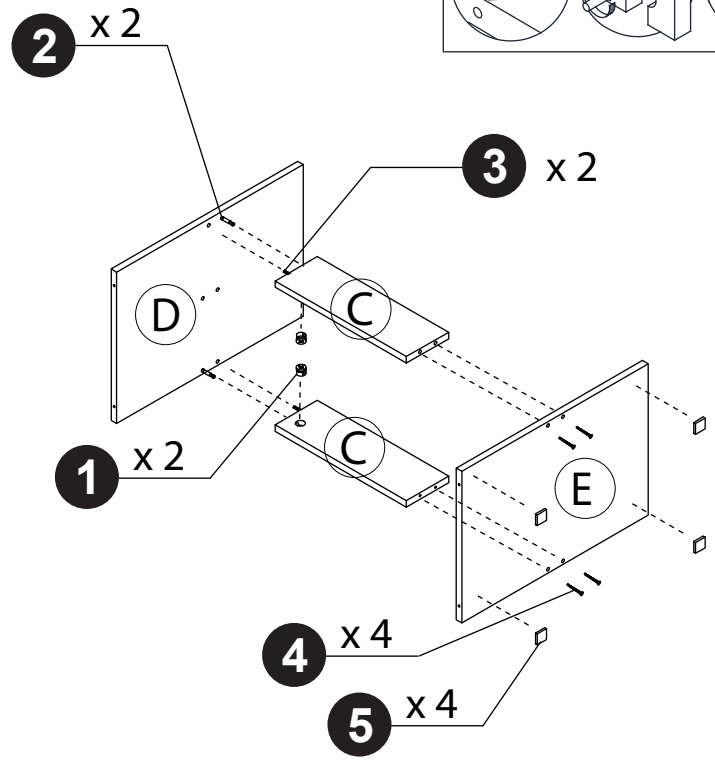

2

