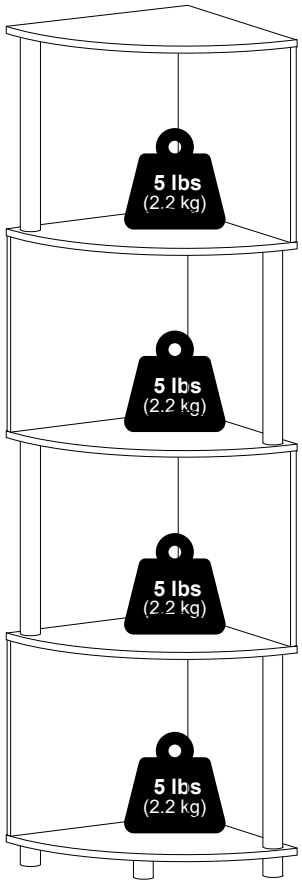

Furinno®

Fits Space, Fits Budget



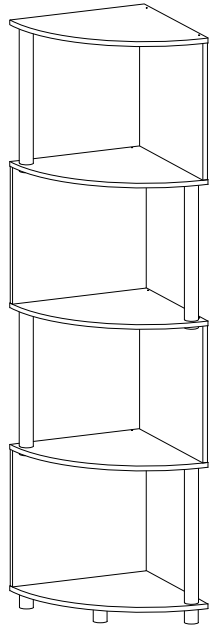

MODEL: 24234

support@furinno.com

www.furinno.com

2423420240909

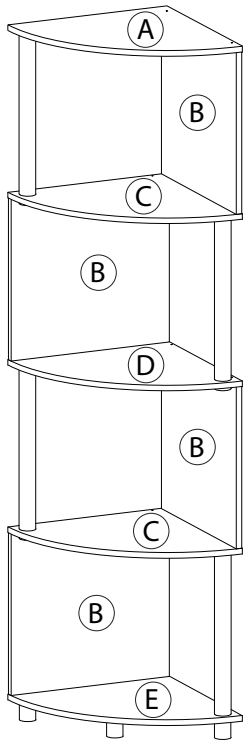

1 x 16  M4 x 32mm	**2** x 4 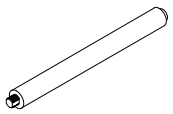 340mm	**3** x 4  34 x 38mm
4 x 3  Ø34 x 8mm	**5** x 1 5a 16 x 28mm 5b 1 1/4” 5c #8 x 1” 5d 4 x 11mm	**6** x 2  34 x 2mm

8

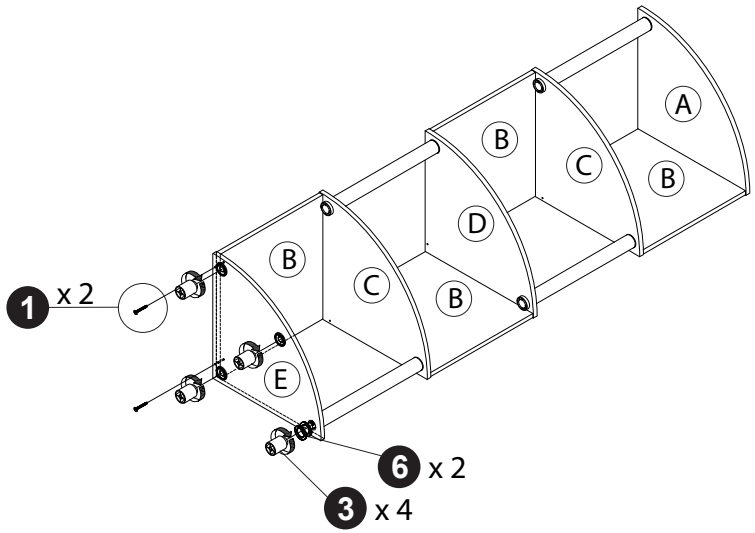

9

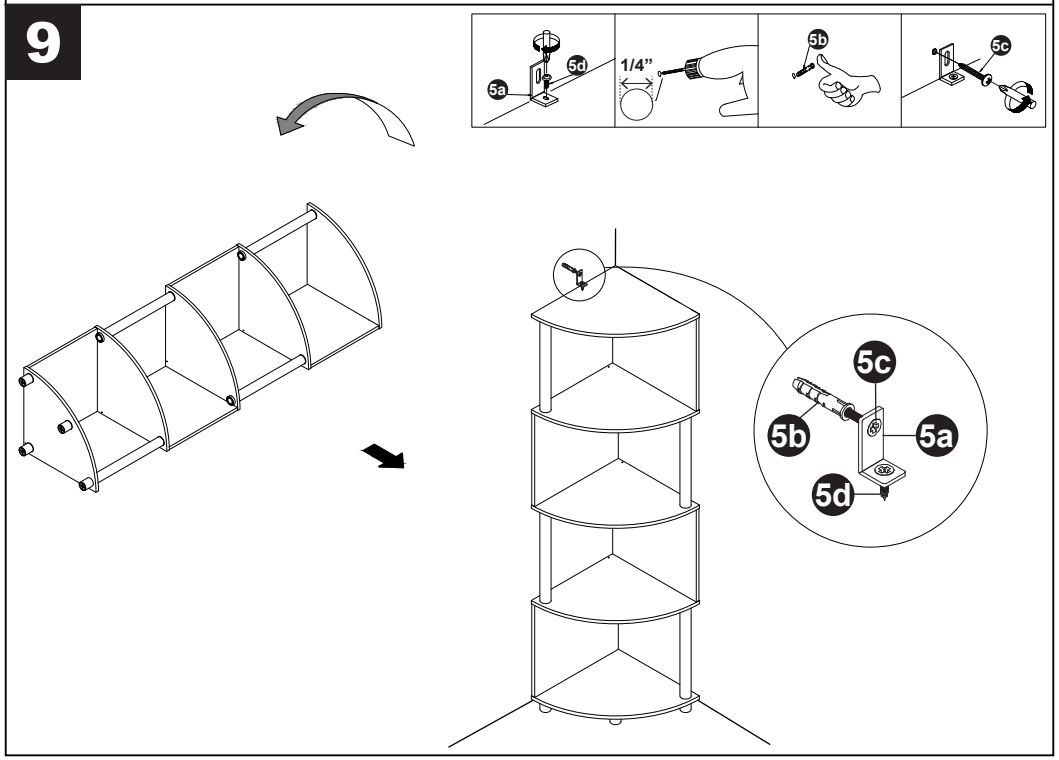

7

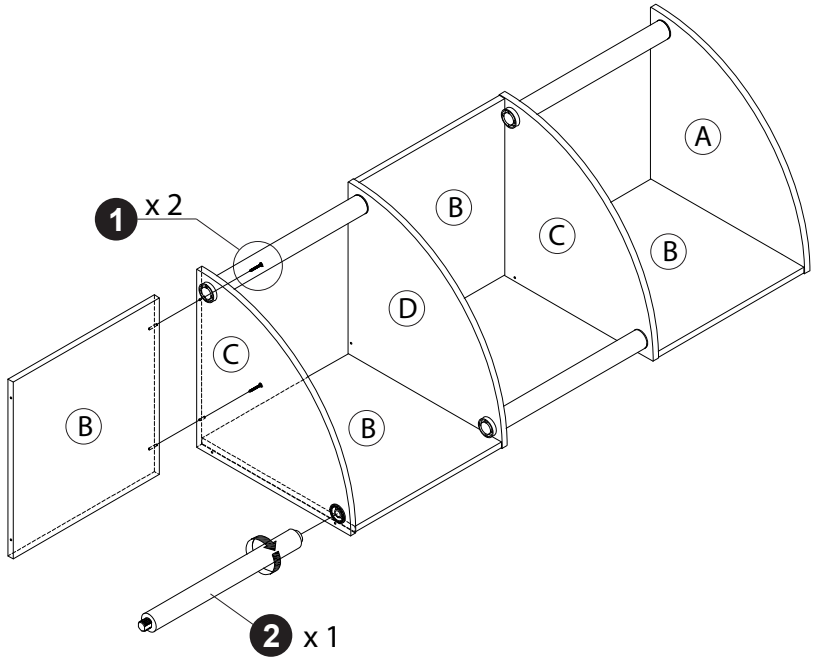

1

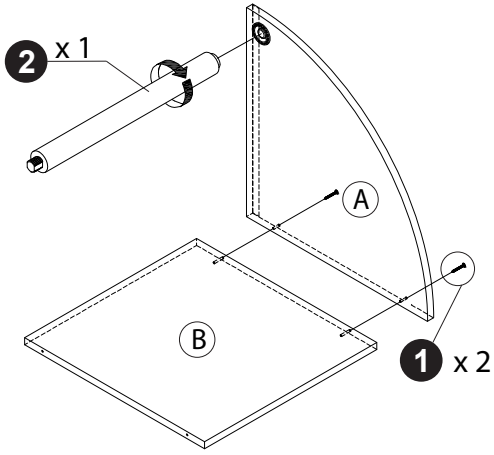

2

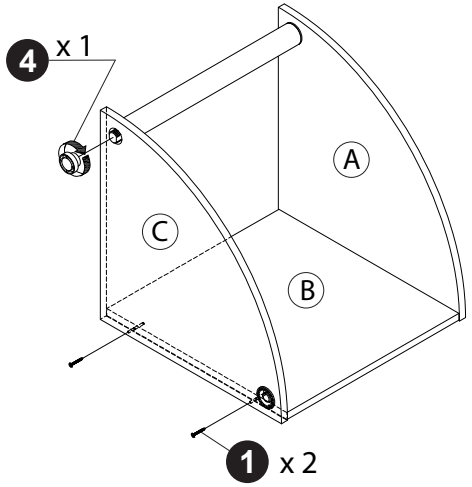

3

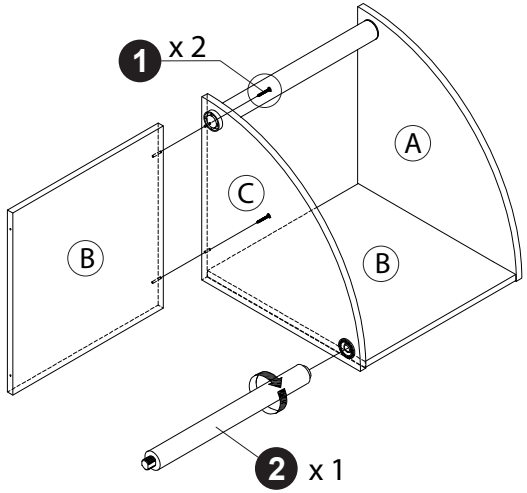

4

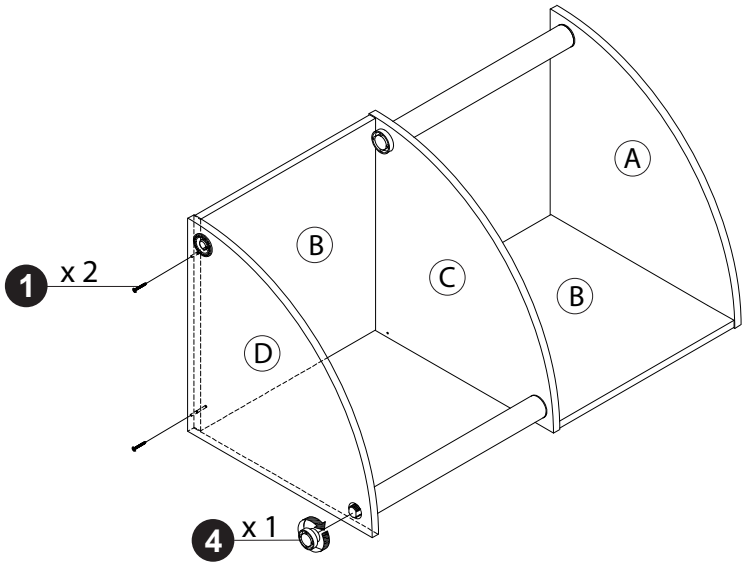

5

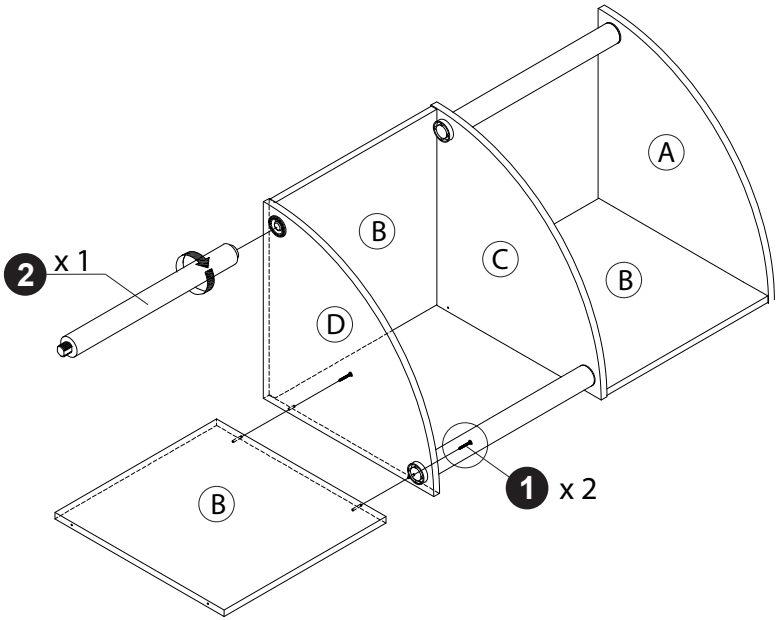

6

