3

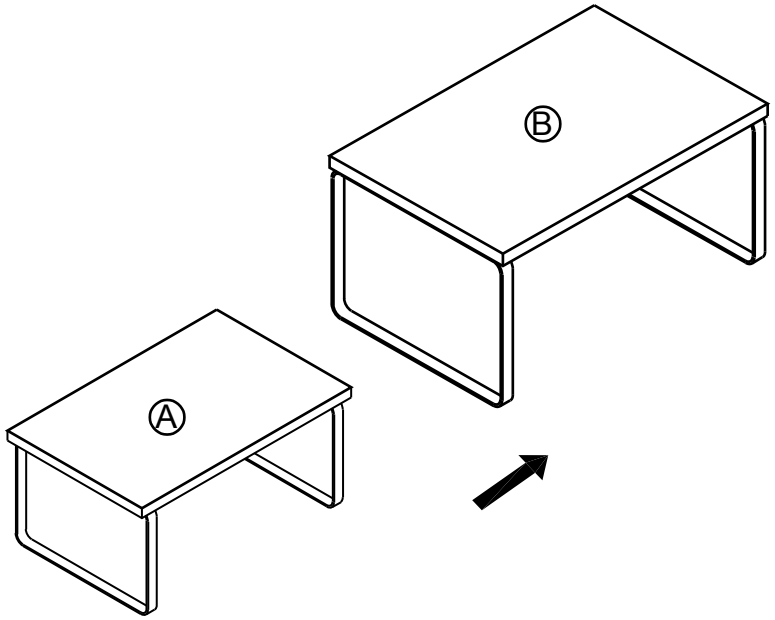

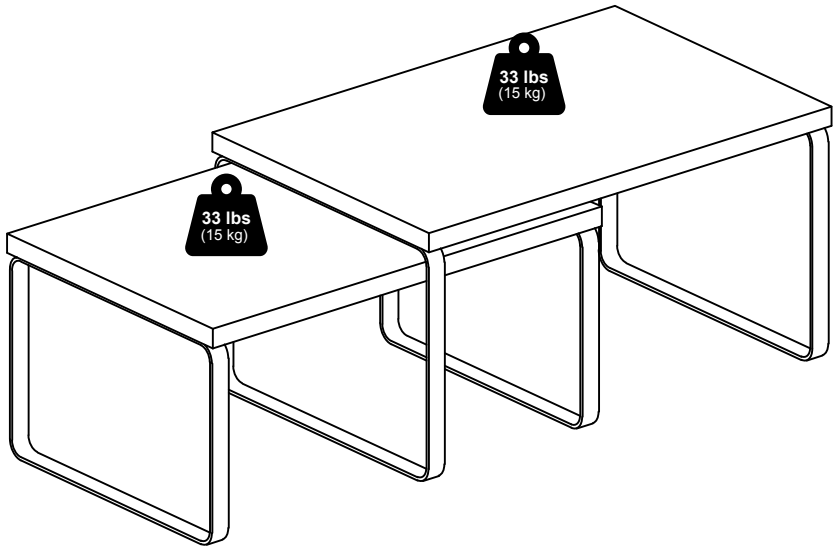



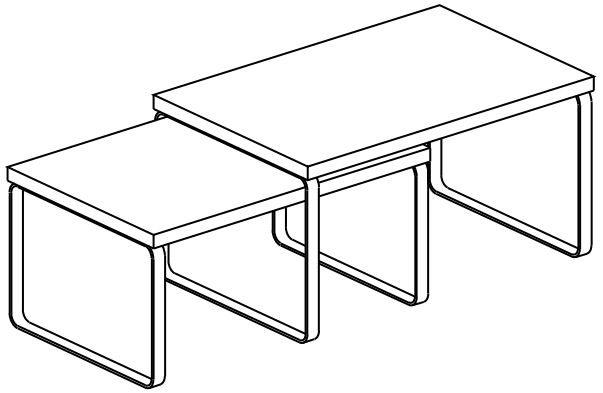

MODEL: 24242

2424220250922

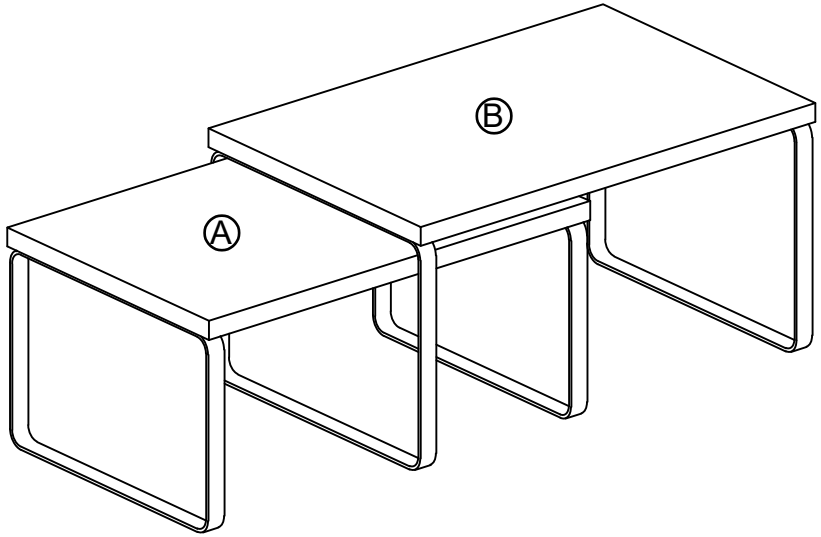

1	2	3
x 8	x 2	x 2
	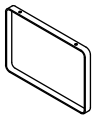	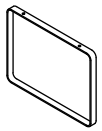
M3.5 x 10mm	182 x 125mm	192 x 143mm

1

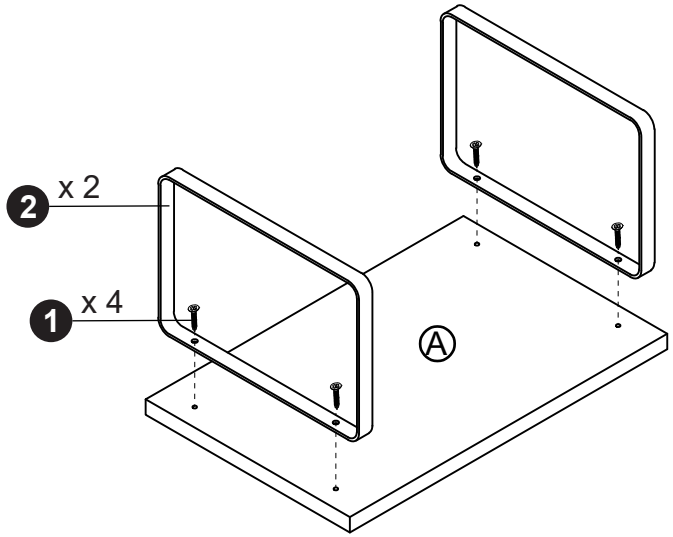

2

