11

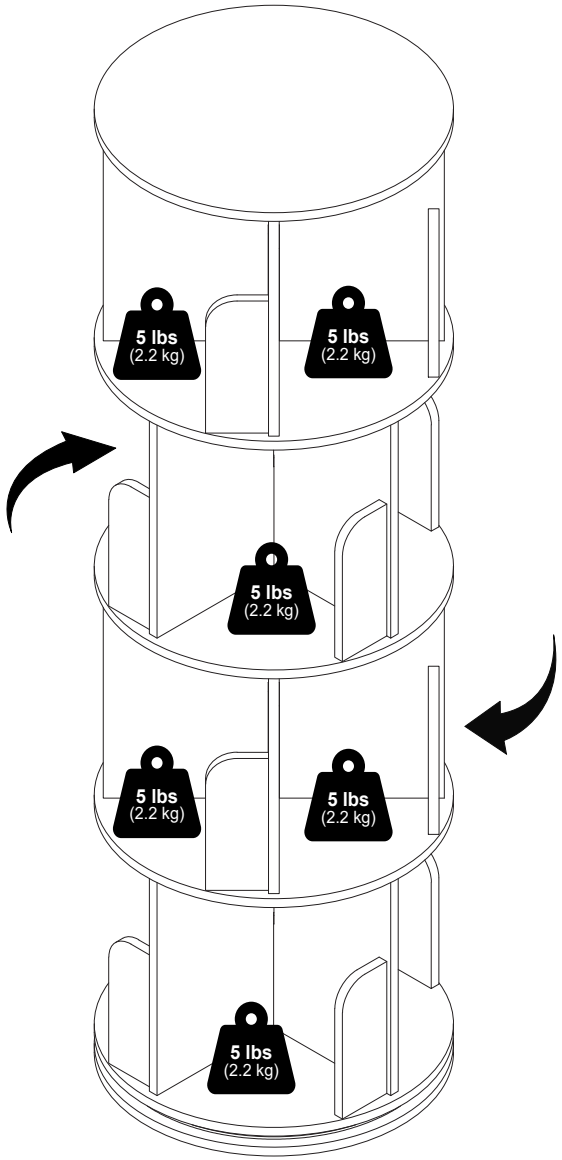

Furinno®

Fits Space, Fits Budget

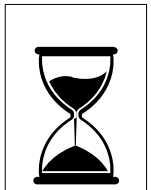



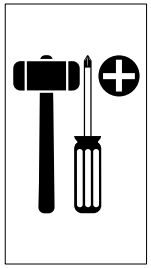

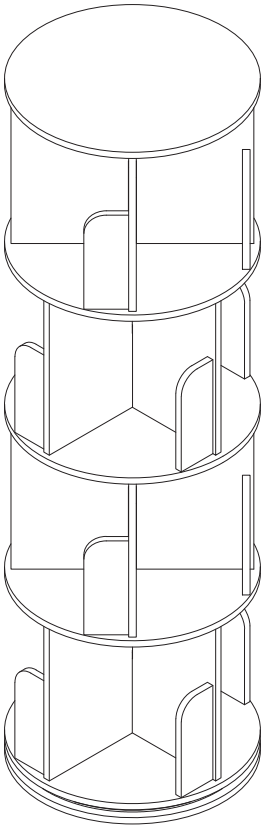

MODEL: 24245

support@furinno.com

www.furinno.com

2424520250311

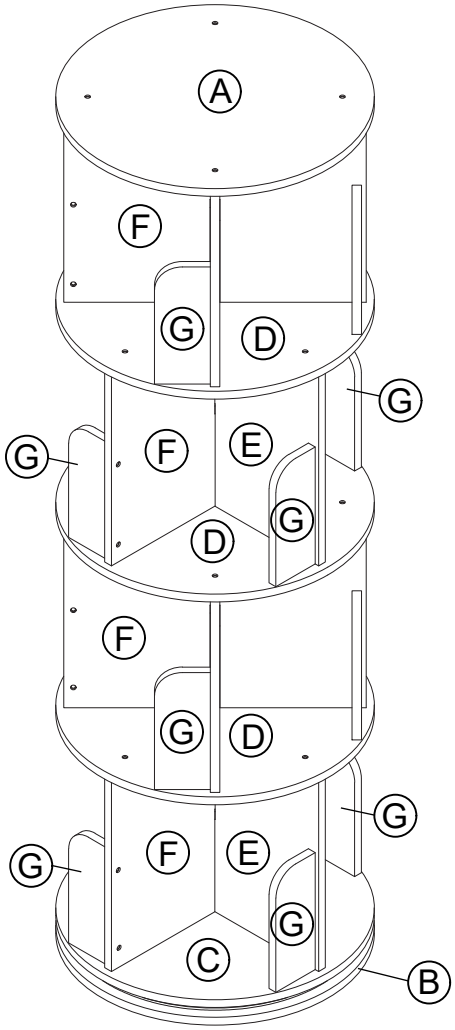

1 x 80	2 x 8	3 x 1	4 x 48
		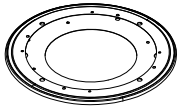	
M3.5 x 32mm	M4 x 11mm	12inch	15mm

9

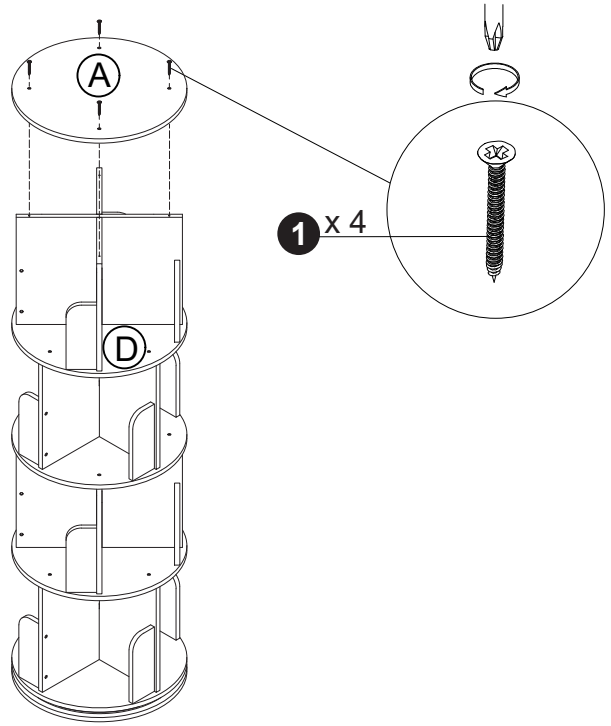

10

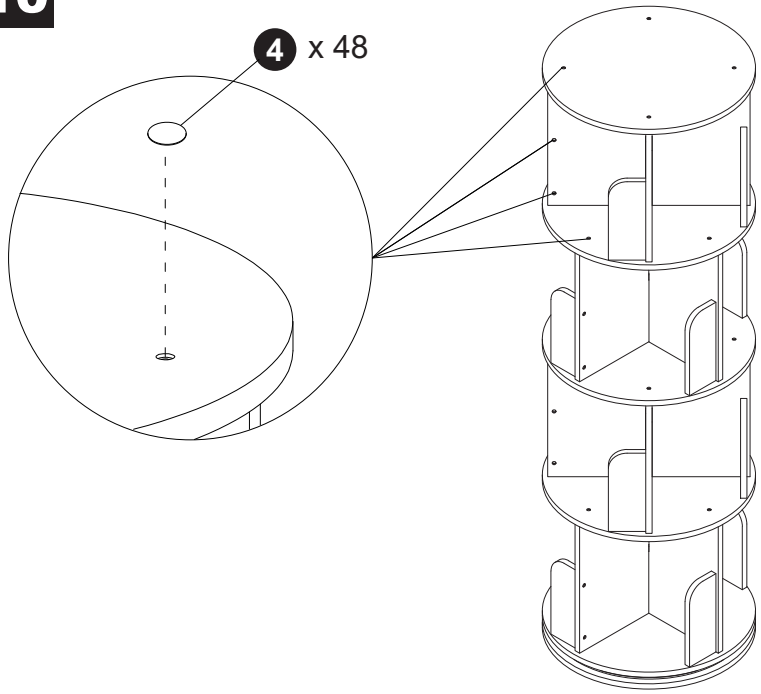

7

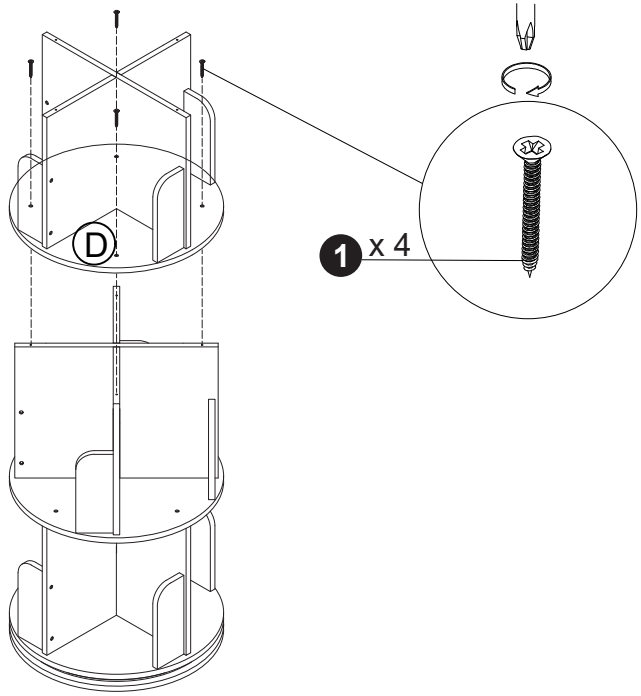

8

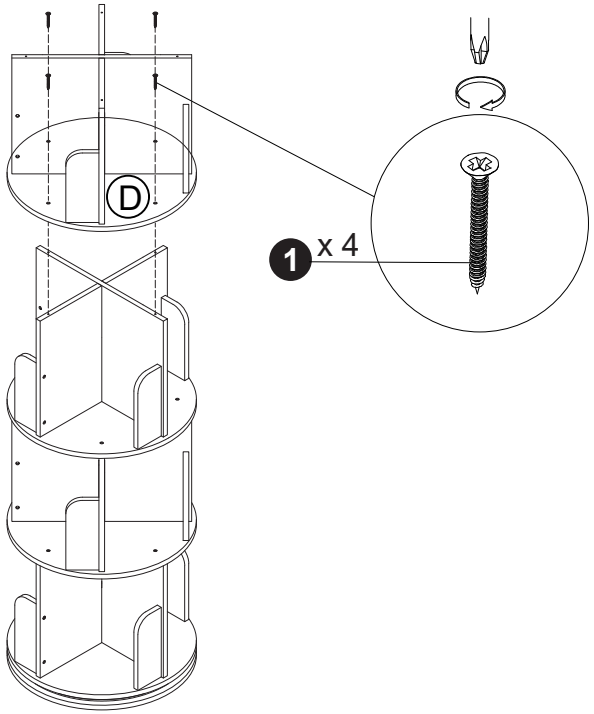

1

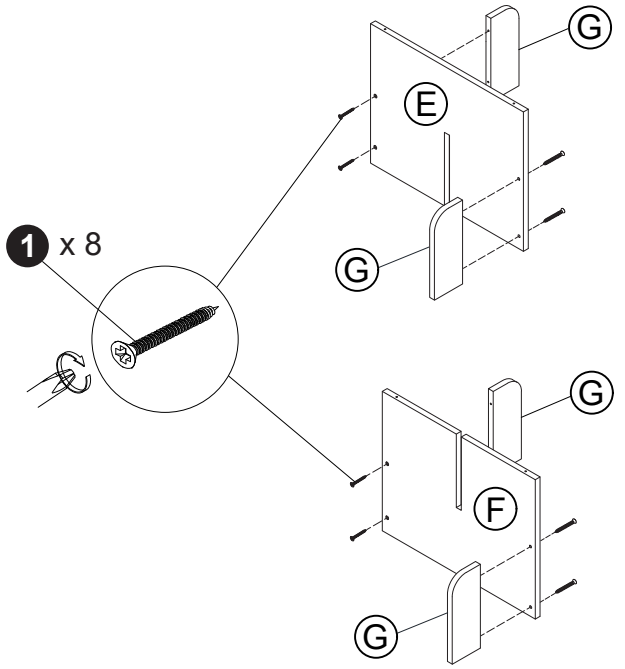

x 4

2

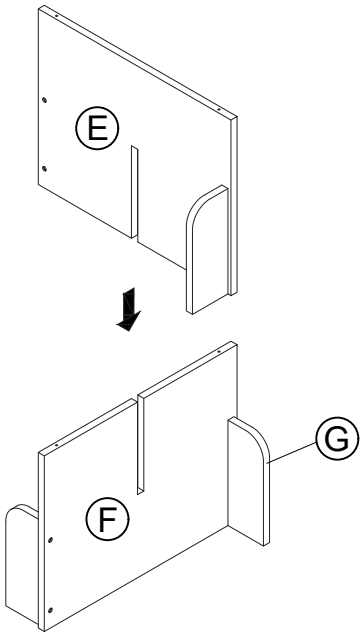

x 4

3

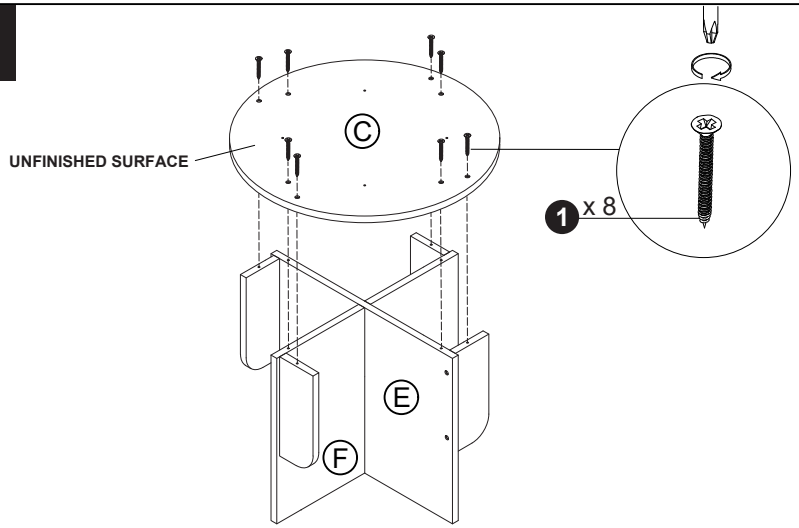
UNFINISHED SURFACE
C
1 x 8
E
F

4

4.1

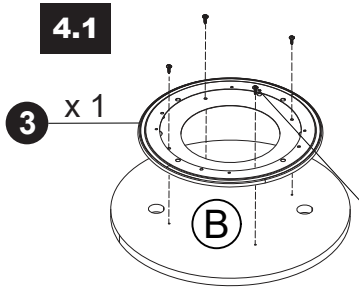
3 x 1
B

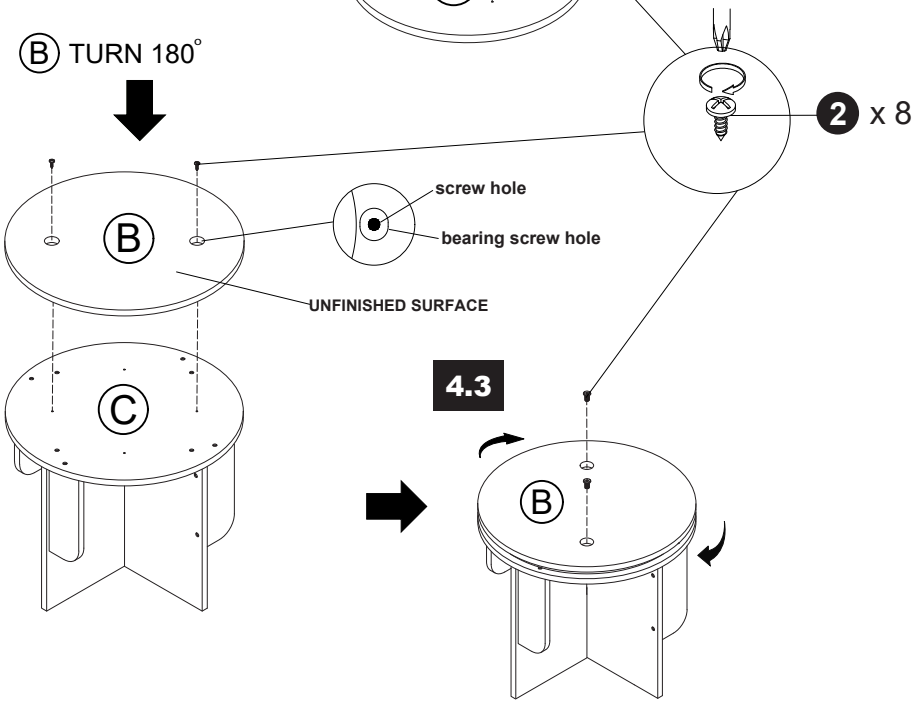
B TURN 180°
4.2
2 x 8
screw hole
bearing screw hole
B
UNFINISHED SURFACE
C
4.3
B

5

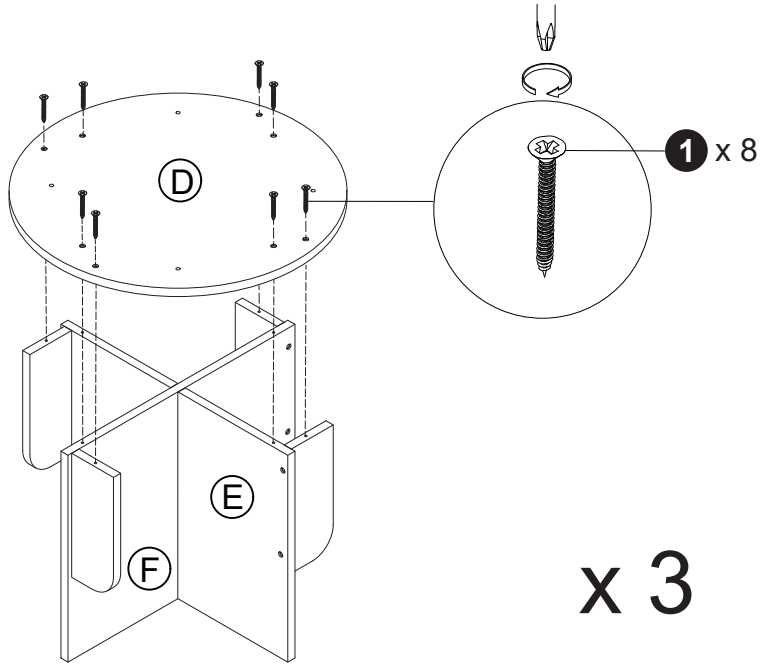
D
1 x 8
E
F
x 3

6

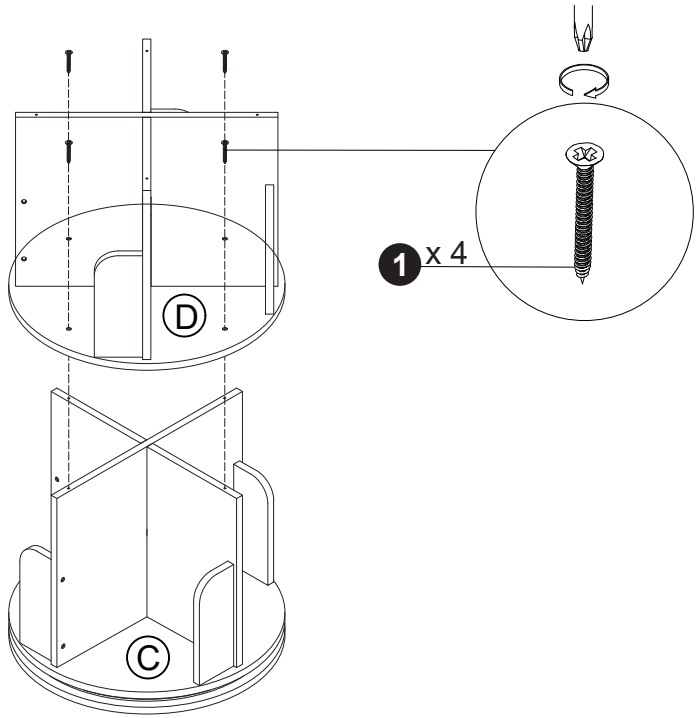
1 x 4
D
C