7

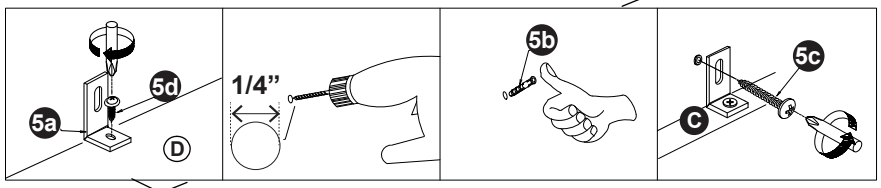

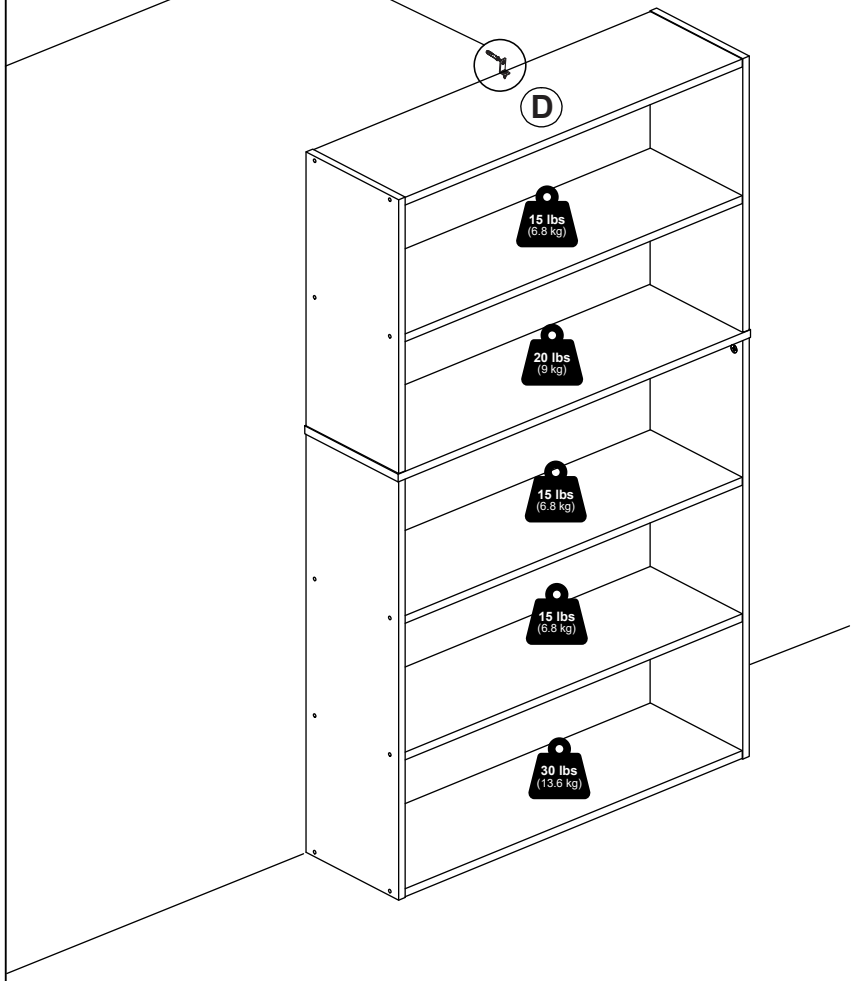

Furinno®

Fits Space, Fits Budget



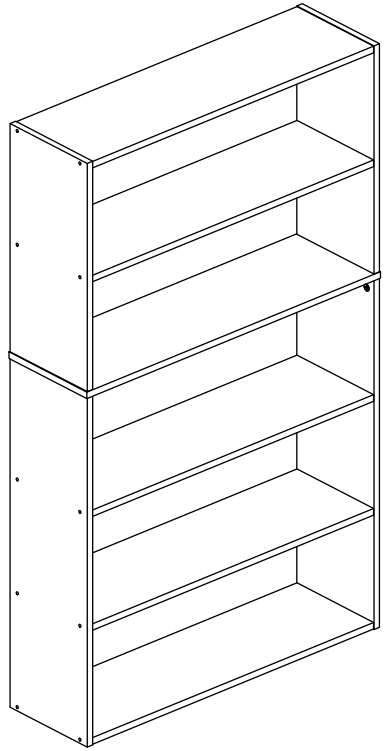

MODEL: 24252

support@furinno.com

www.furinno.com

2425220241120

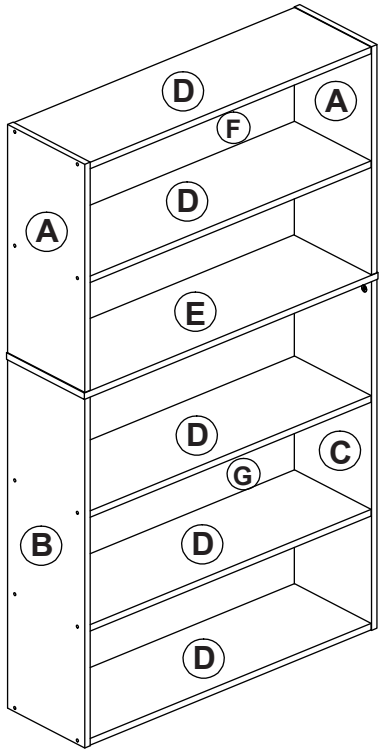

1 x 24	2 x 4	3 x 4	4 x 4
		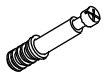	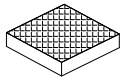
M4 x 38mm	15mm	M6 x 31mm	20 x 20 x 4mm

5 x 1	6 x 38	7 x 1
 5a 16 x 28mm 5b 1/1/4" 5c #8 x 1" 5d 4 x 11mm	 4 x 20mm	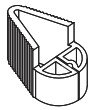

6

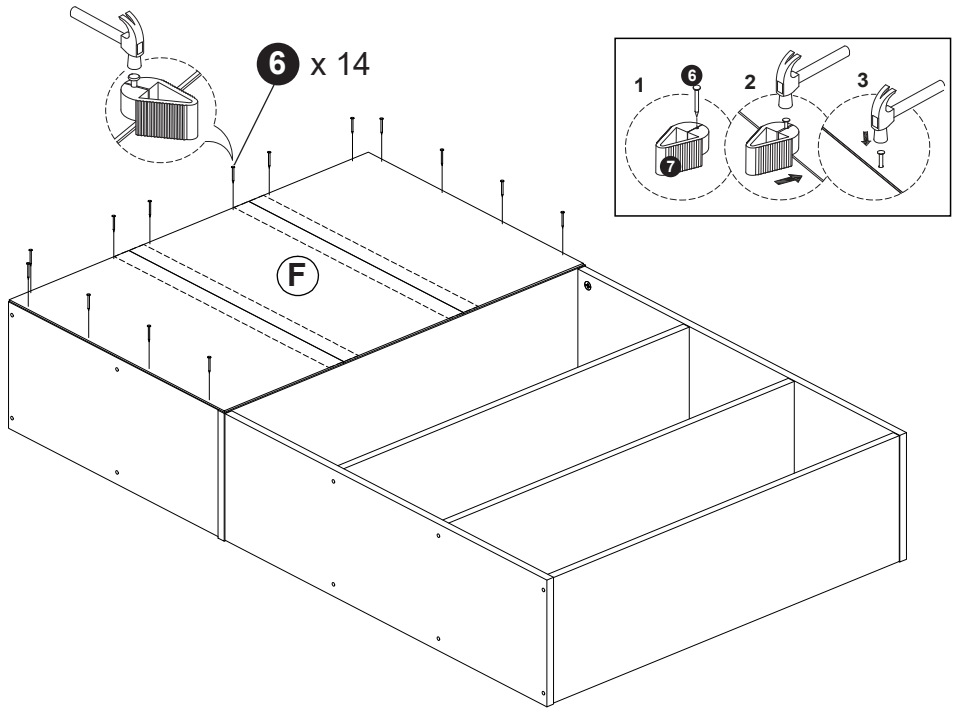

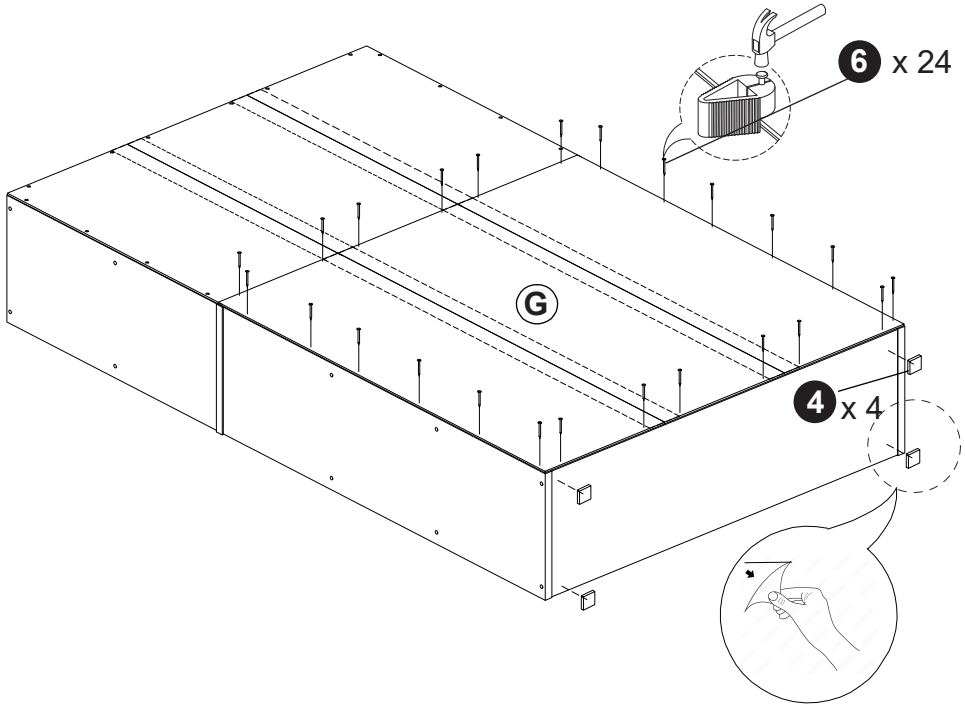

5

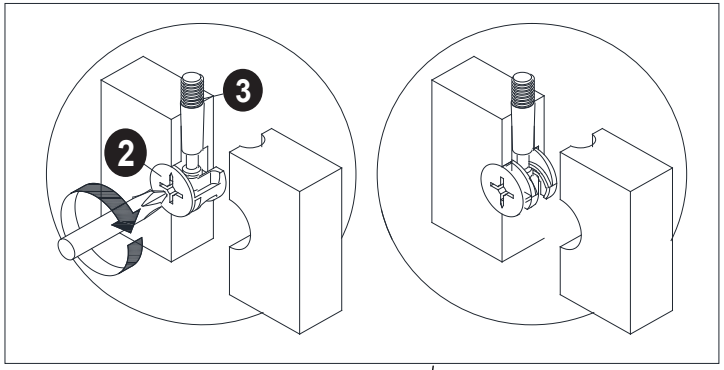

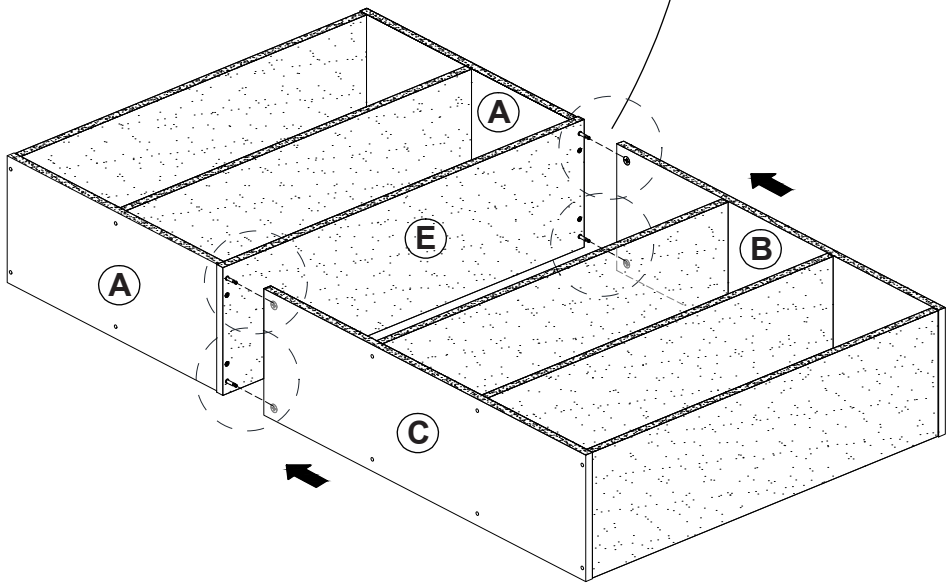

1

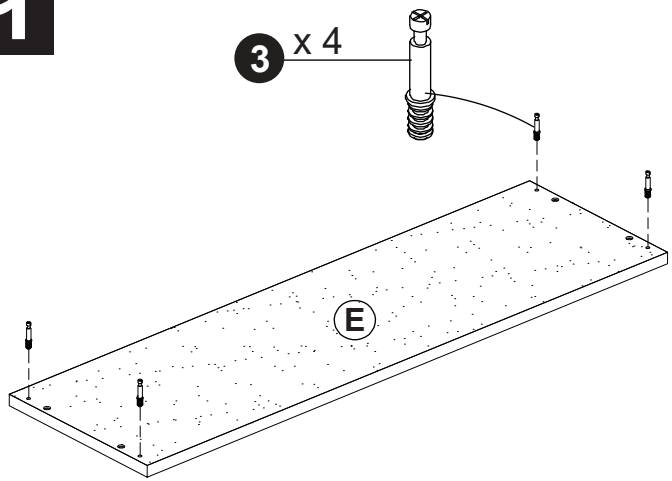

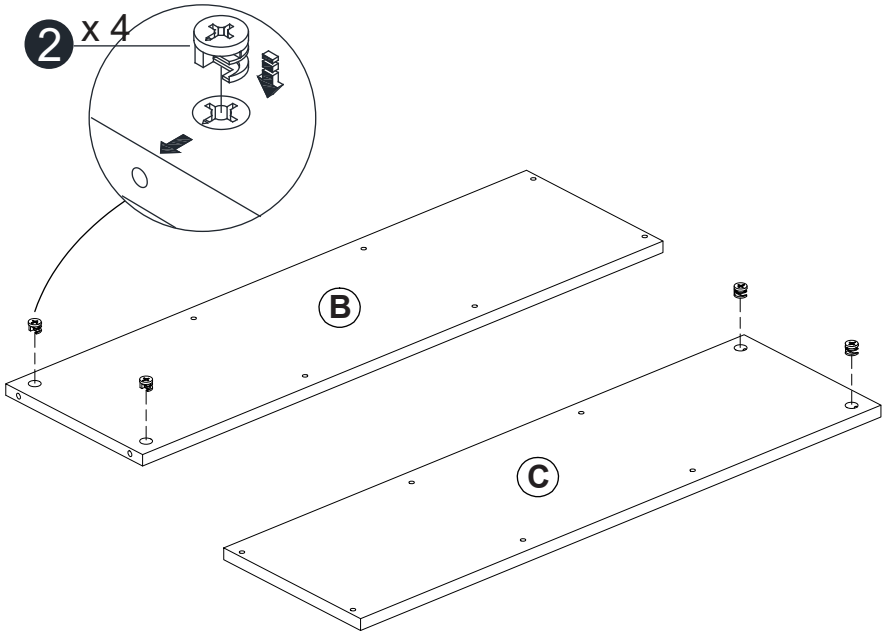

2

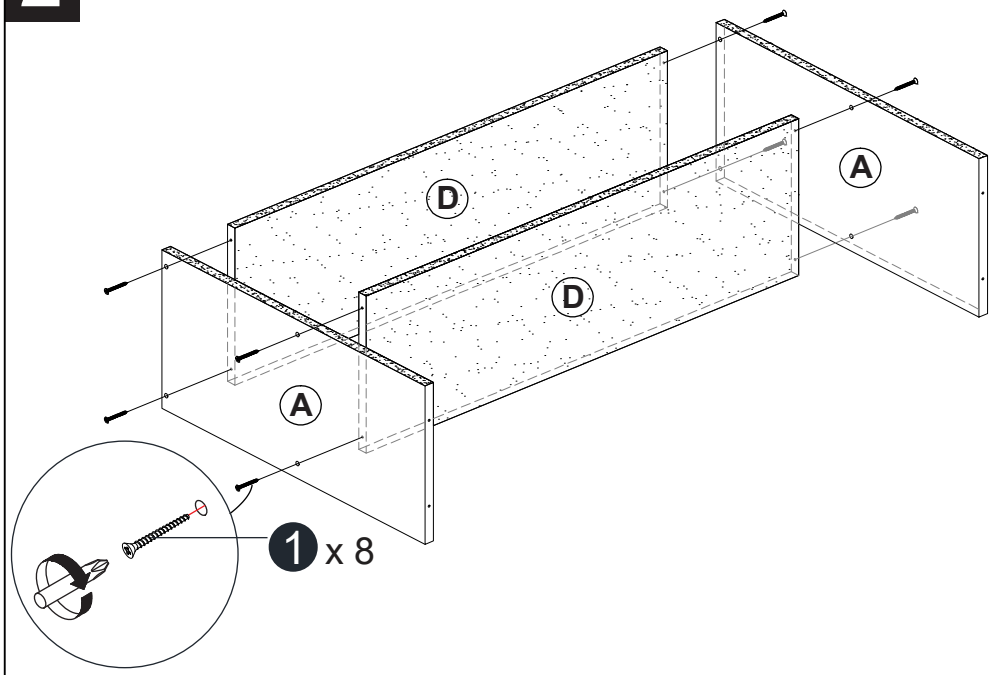

3

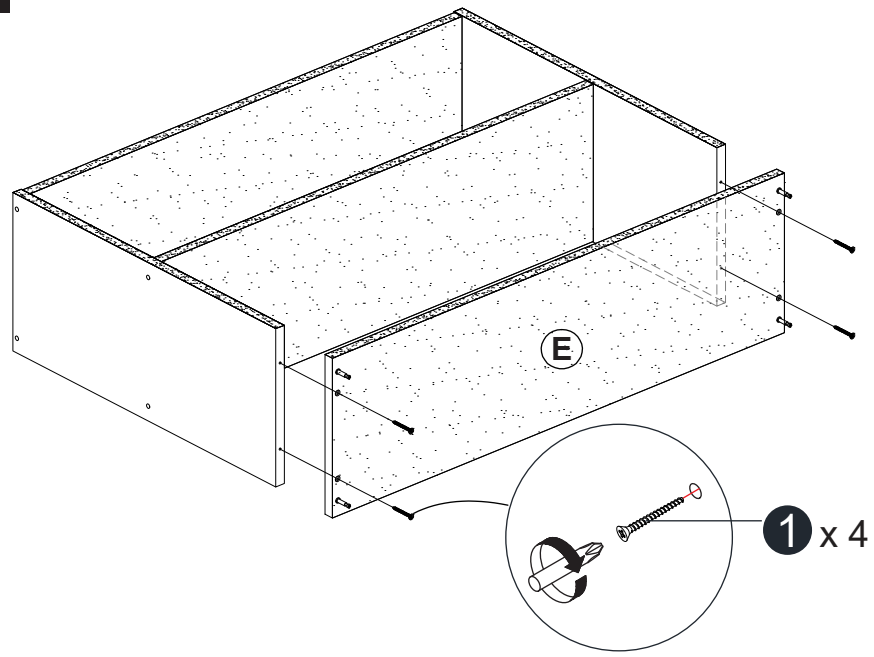

4

