Furinno®

Fits Space, Fits Budget





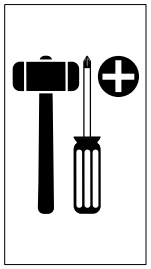

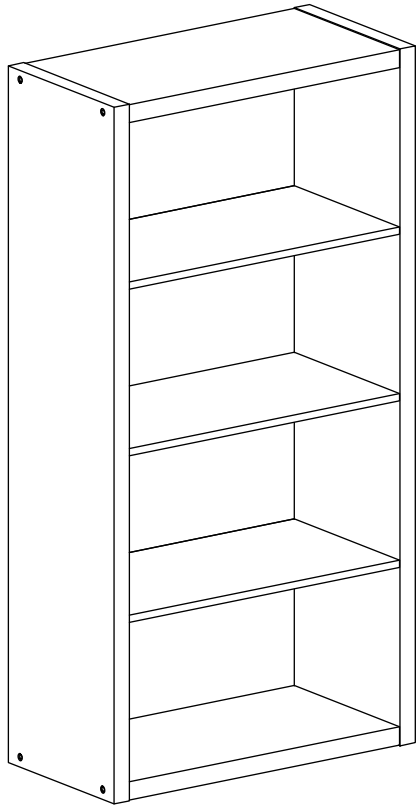

MODEL: 24267

 ***support@furinno.com***

 ***www.furinno.com***

2426720241209

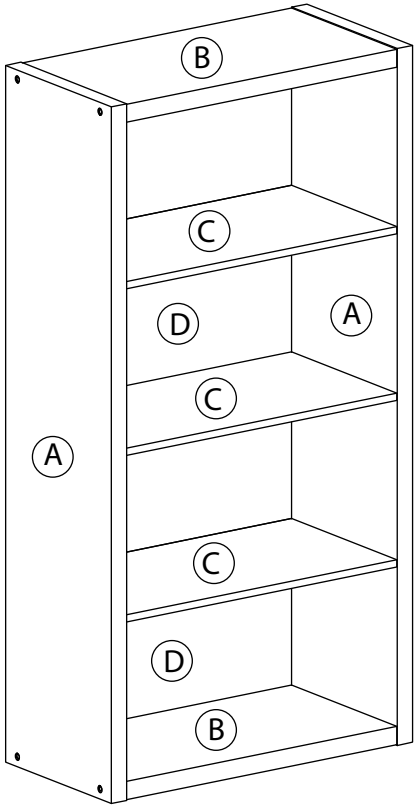

1 x 12  15mm	**2** x 12 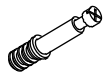 M6 x 31mm	**3** x 1  M4 x 30 x 70mm	**4** x 8  M7 x 75mm
5 x 8  Ø14 x 3mm	**6** x 24  4 x 20mm	**7** x 1 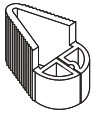	**8** x 1 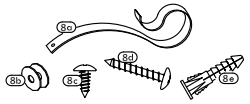

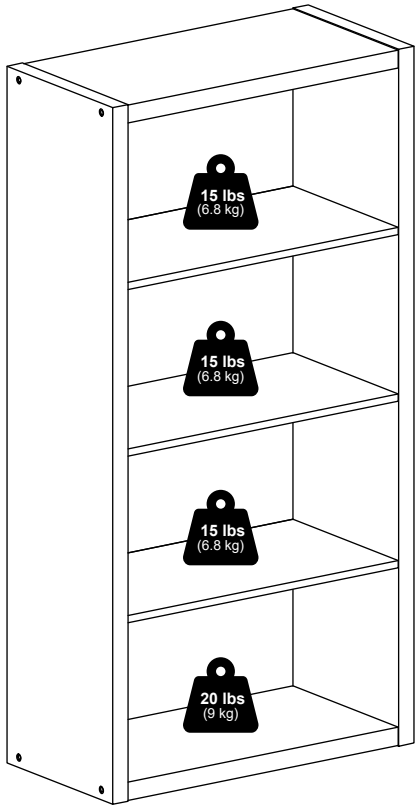

5

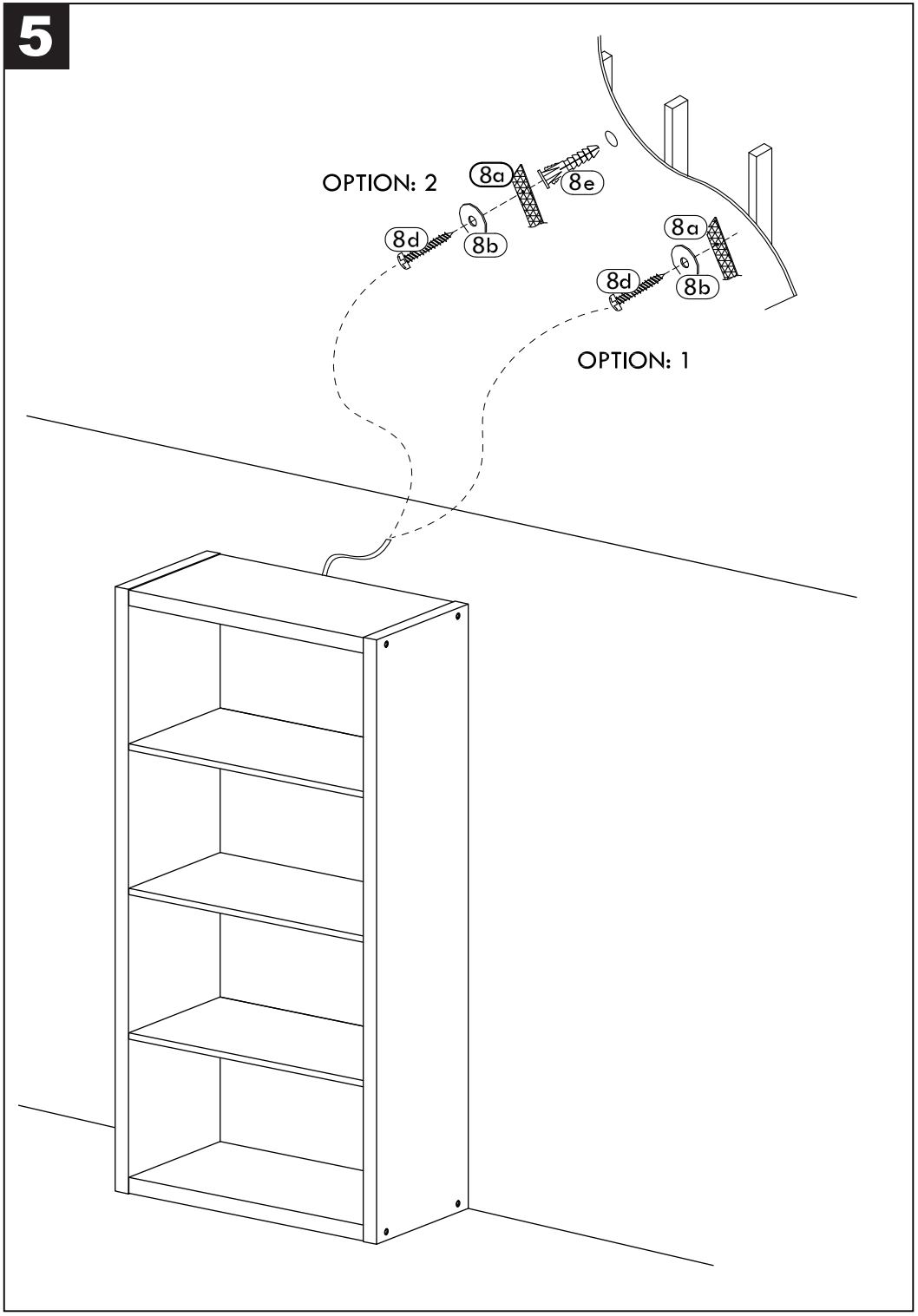

1

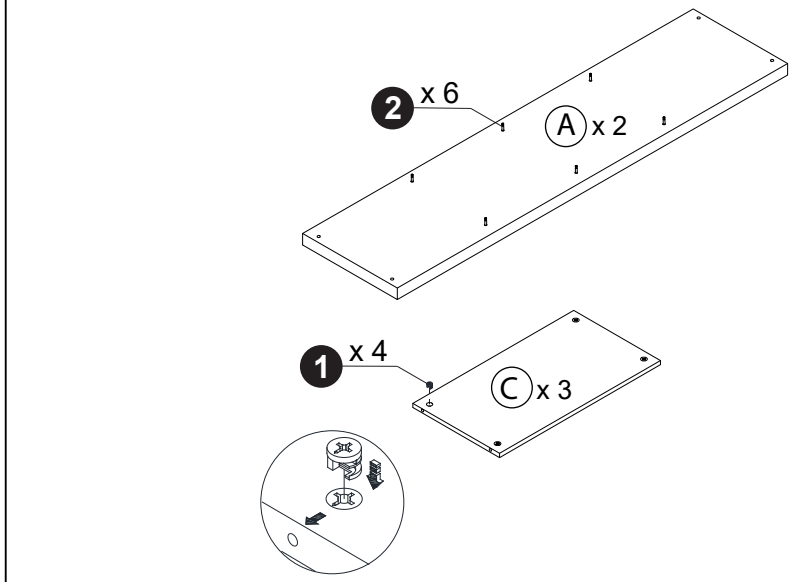

2

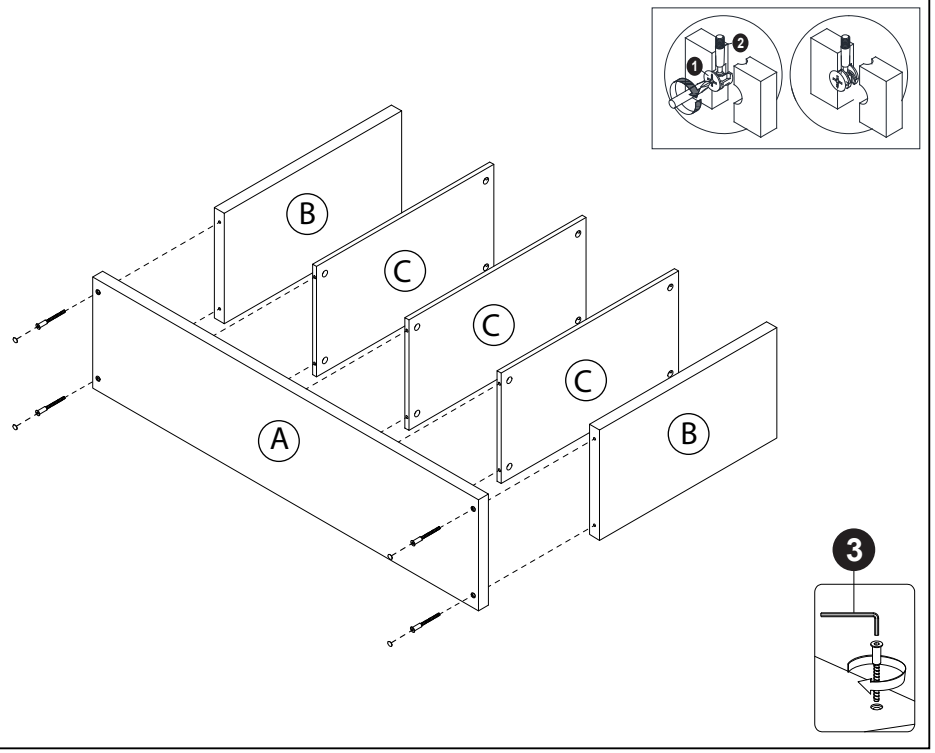

3

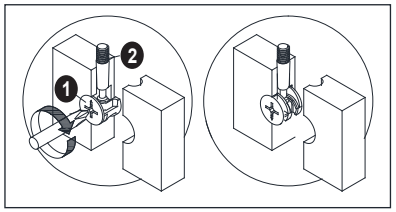

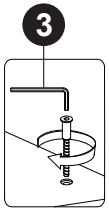

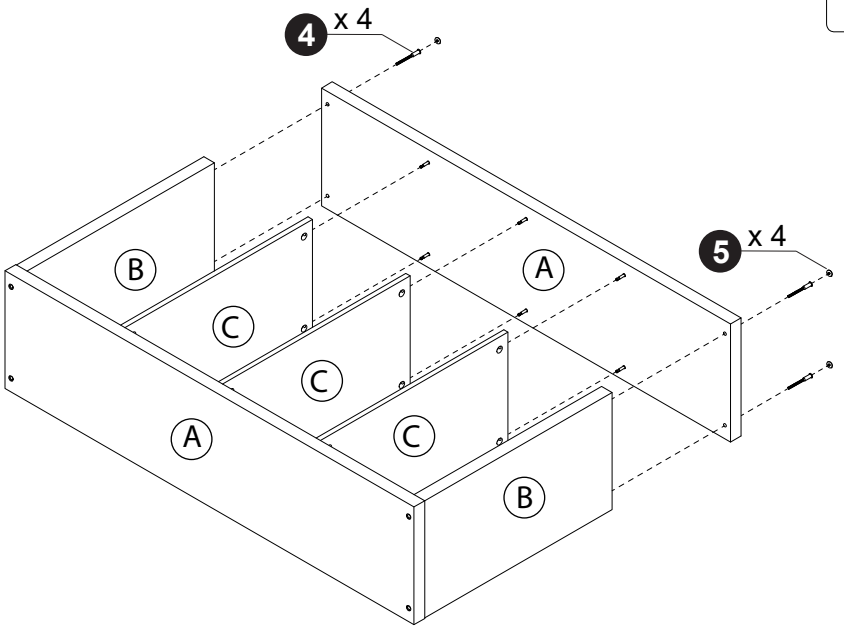

4

