7

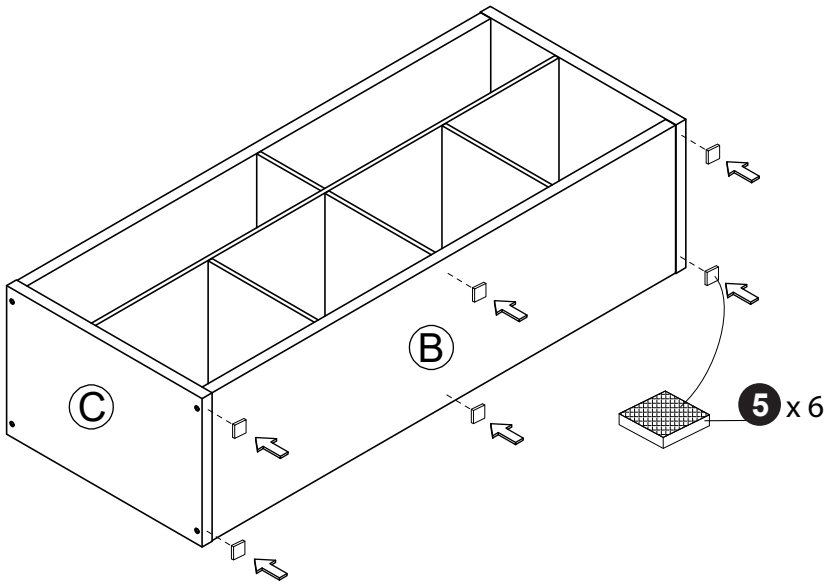

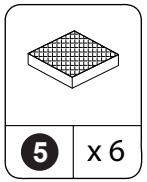

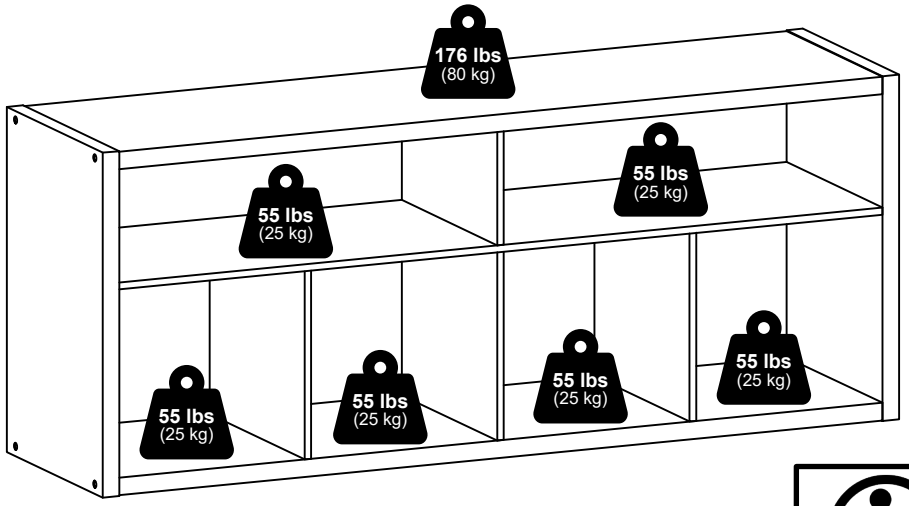





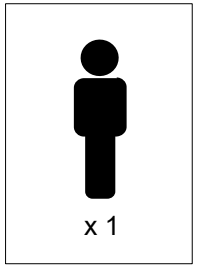

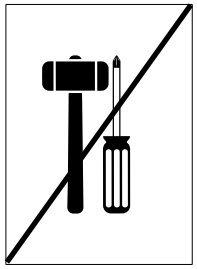

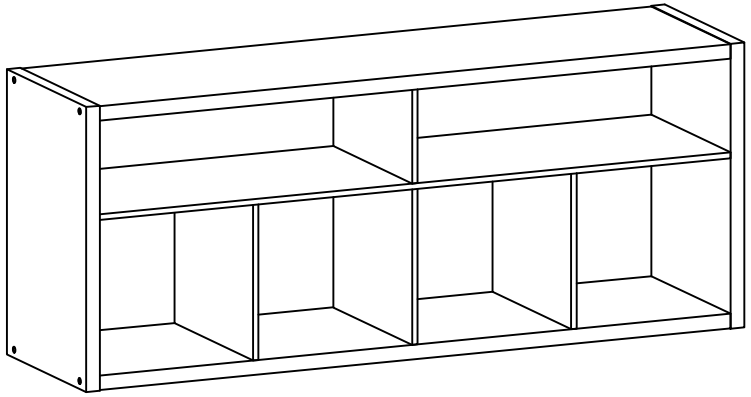

MODEL: 24272

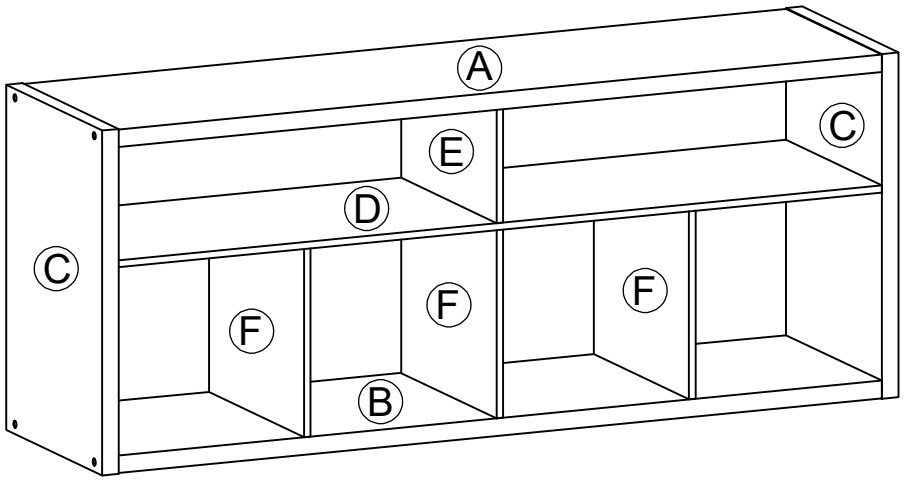

1 x 1	2 x 8	3 x 2
	M7 x 75mm	M5 x 50mm
4 x 16	5 x 6	
M5 x 30mm		

6

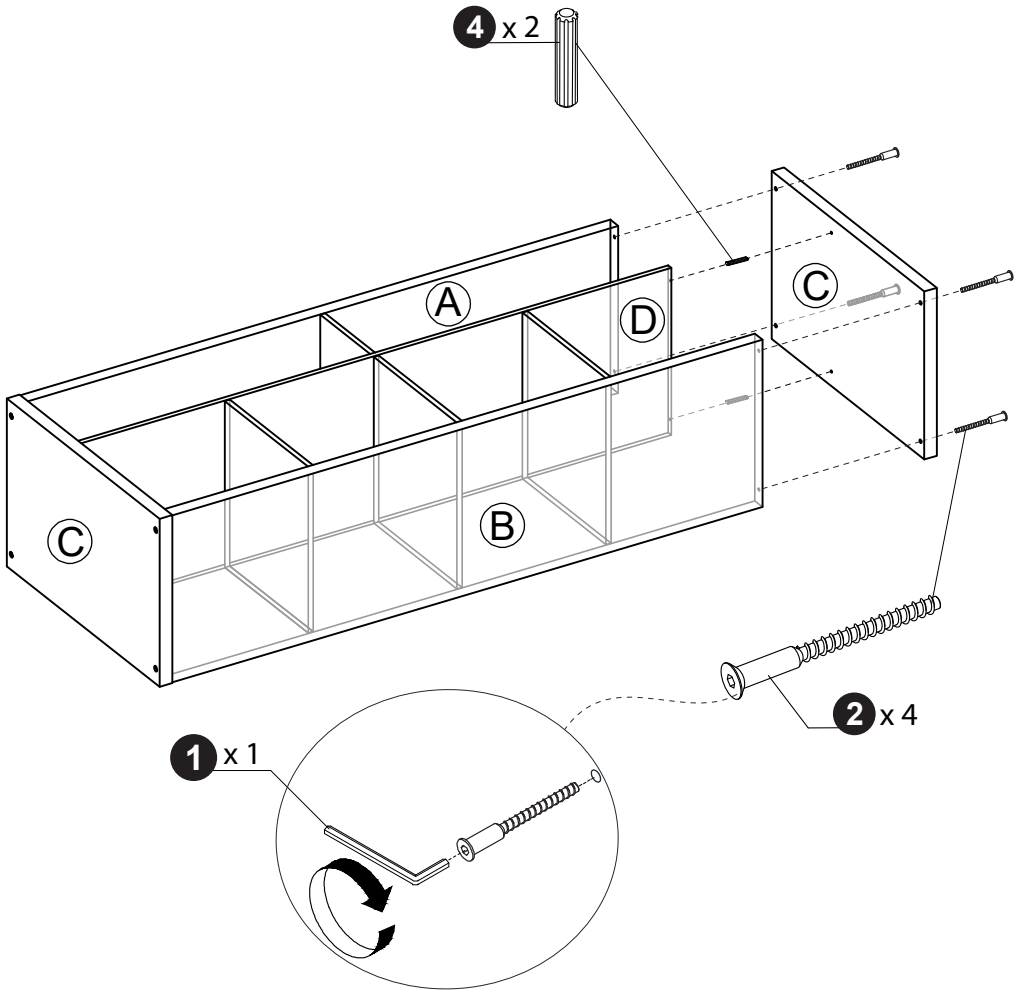

1 x 1	2 x 4	4 x 2

5

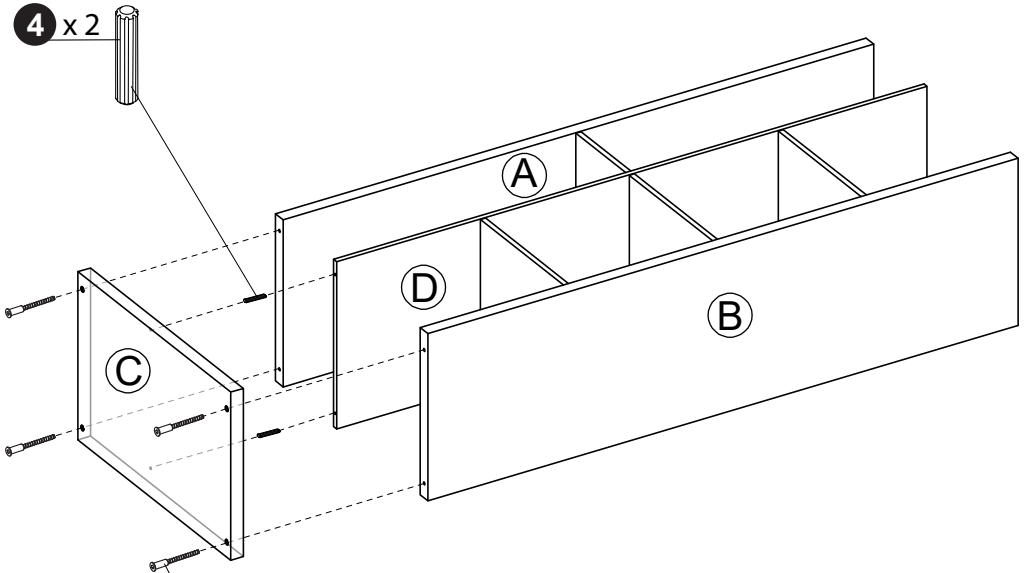

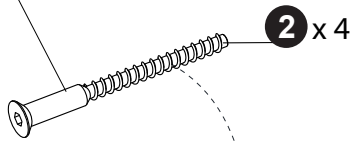

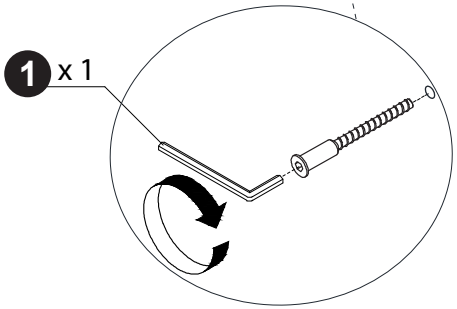

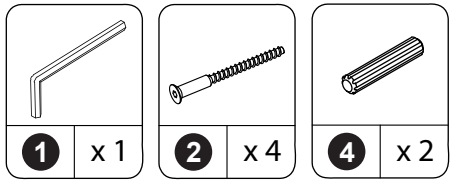

1

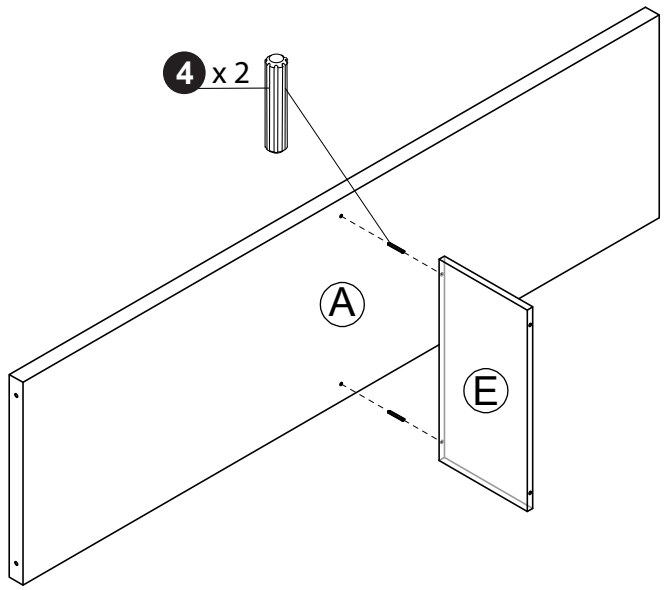

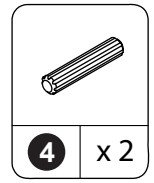

2

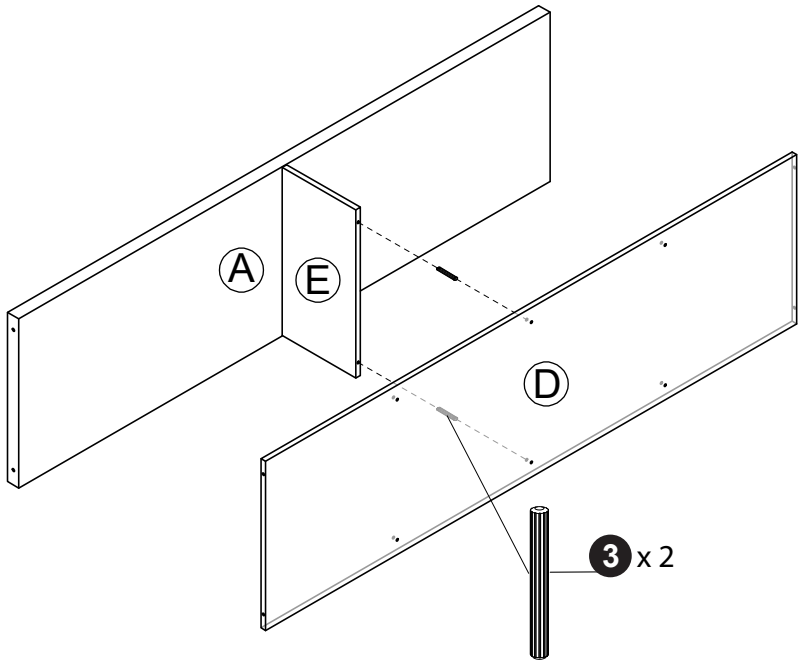

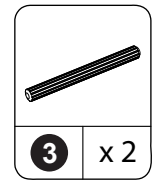

3

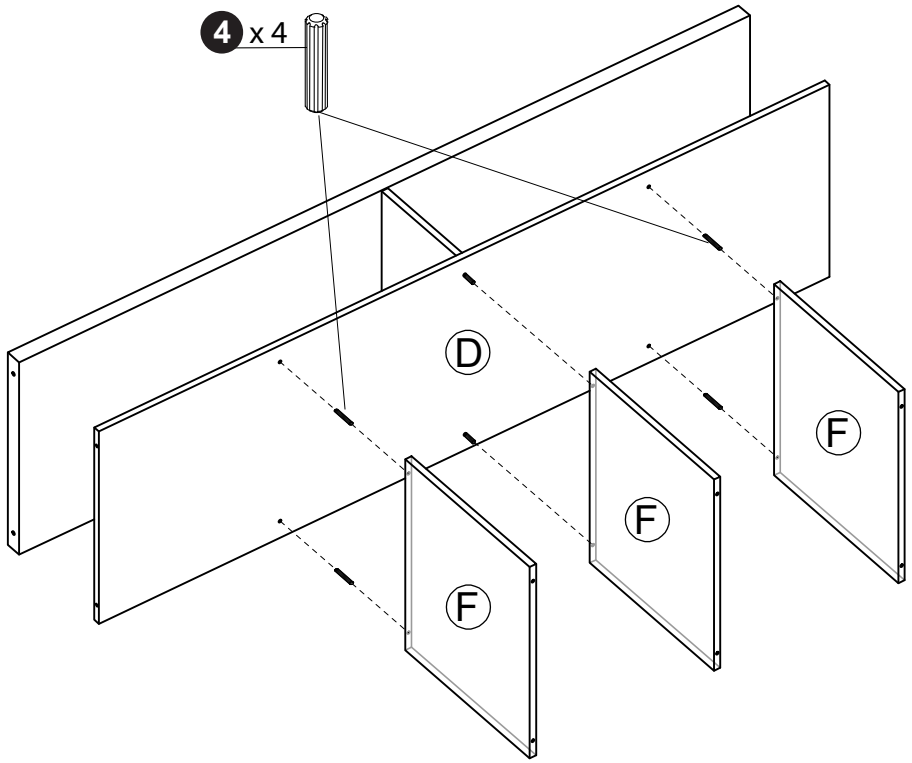

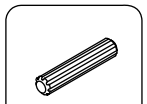

4 x 4

4

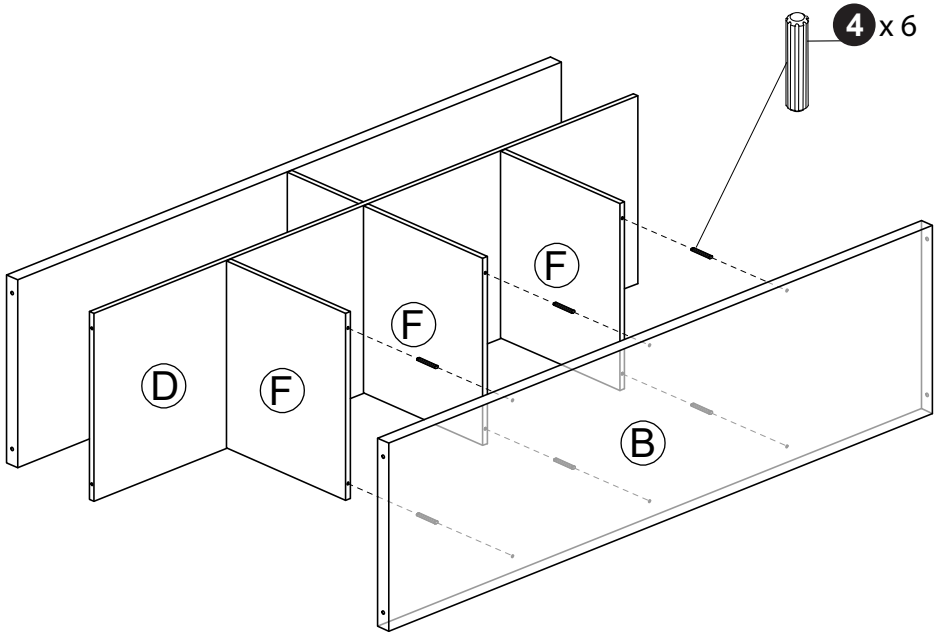

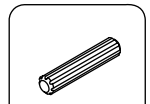

4 x 6