5

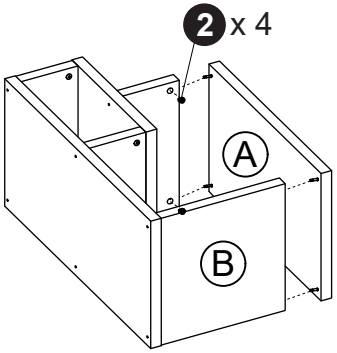

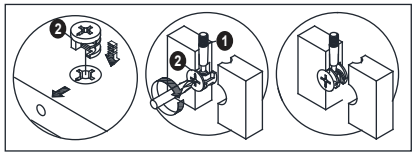

6

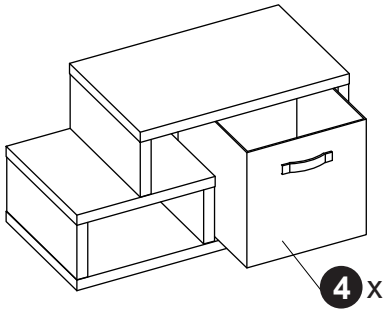

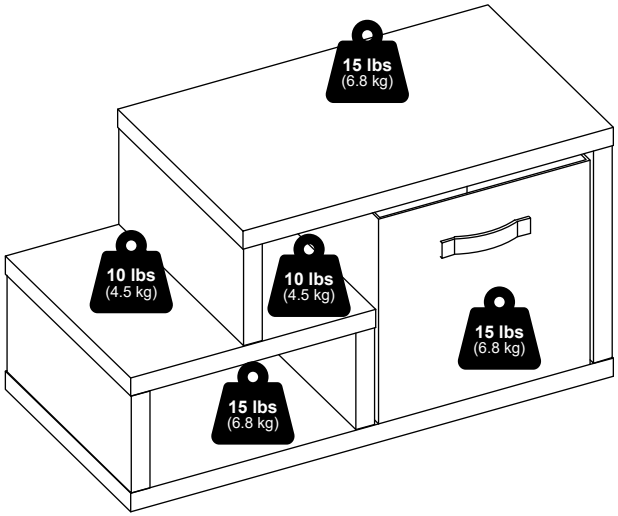



Furinno®

Fits Space, Fits Budget





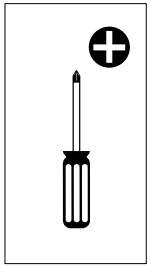

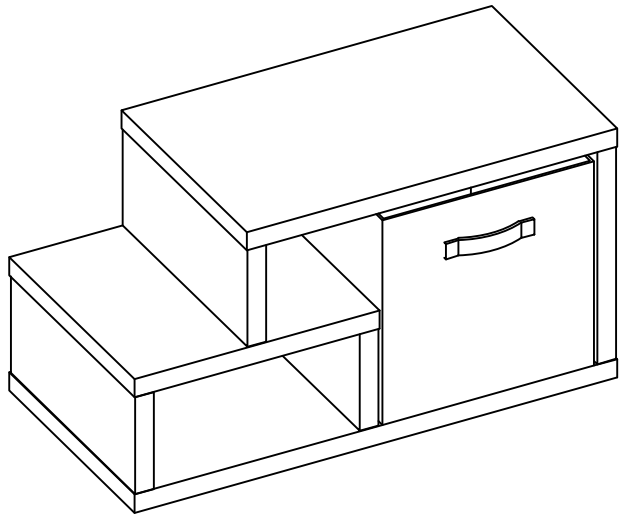

MODEL: 24273

support@furinno.com

www.furinno.com

2427320241214

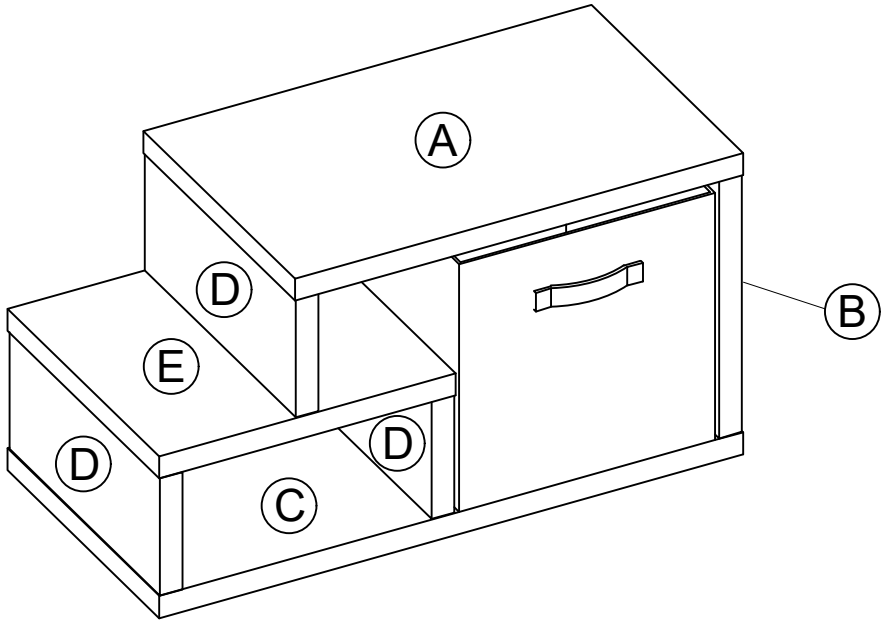

1 x 8 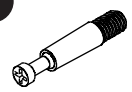 M6 x 31mm	2 x 8  15mm	4 x 1 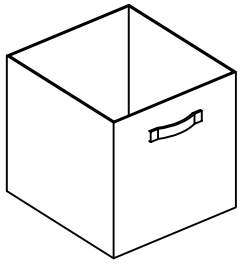 L 335 x W 360 x H 335
3 x 8  M4 x 45mm		

1

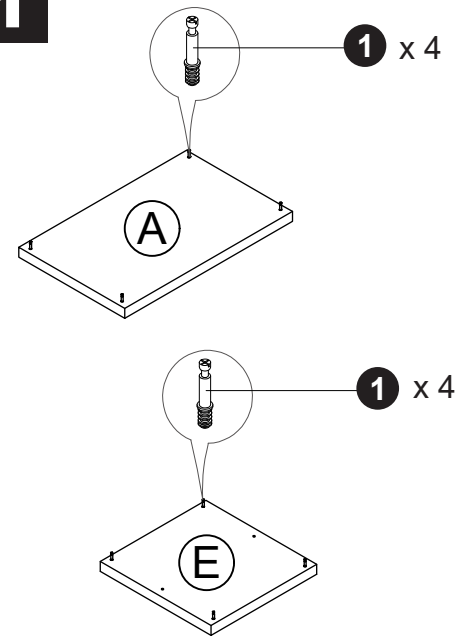

2

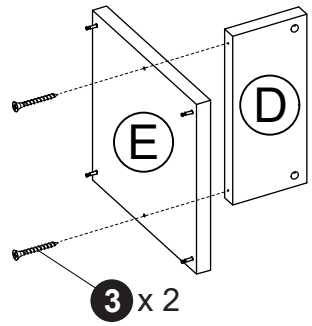

3

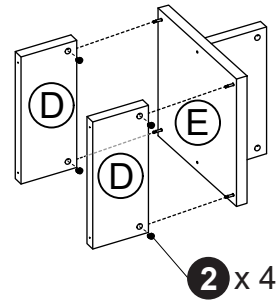

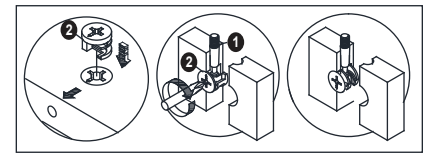

4

