Furinno®

Fits Space, Fits Budget



00:30



x 1

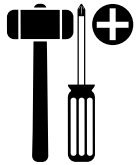

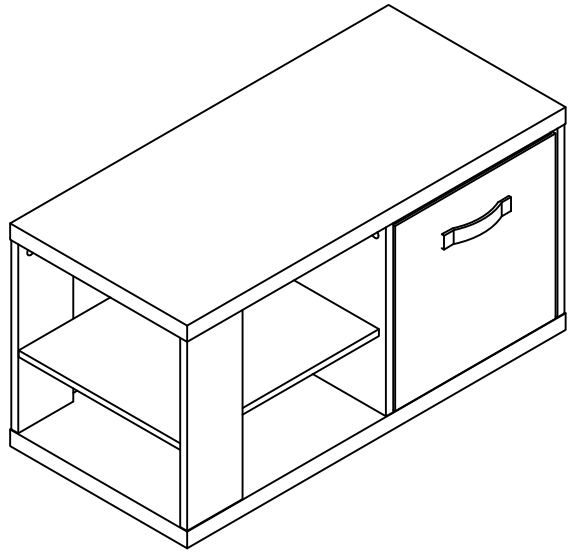

MODEL: 24274



support@furinno.com



www.furinno.com

2427420250110

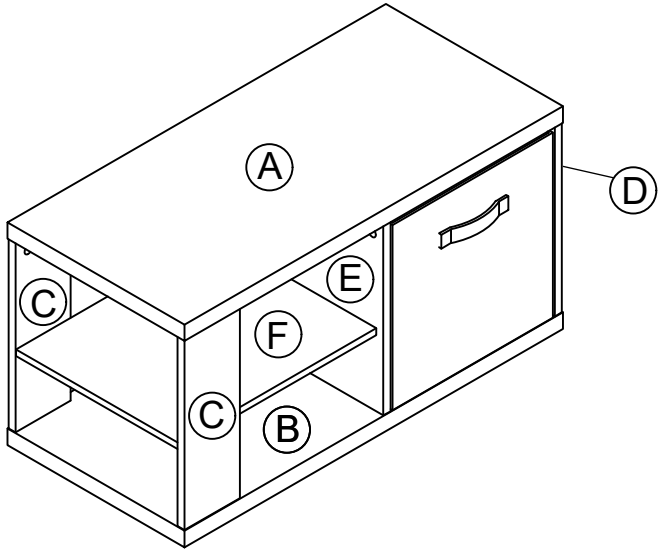

1 x 10 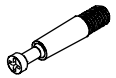 M6 x 31mm	2 x 10  15mm	3 x 4  M5 x 30mm
4 x 8  M4 x 45 mm	5 x 6 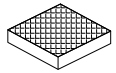 20 x 20 x 6 mm	6 x 1 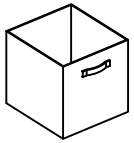 335 x 360 x 335mm

8

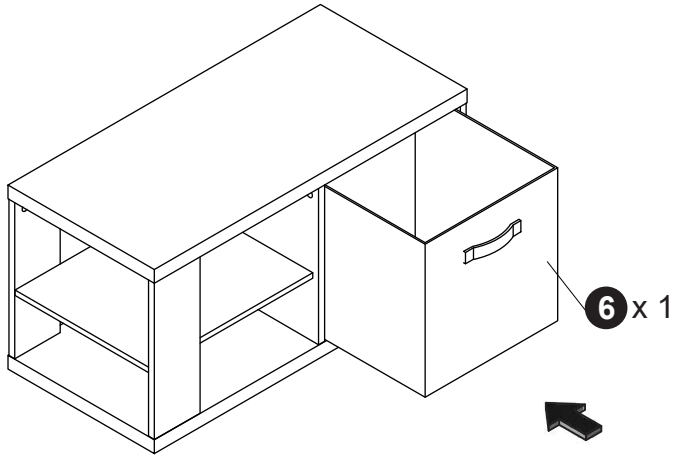

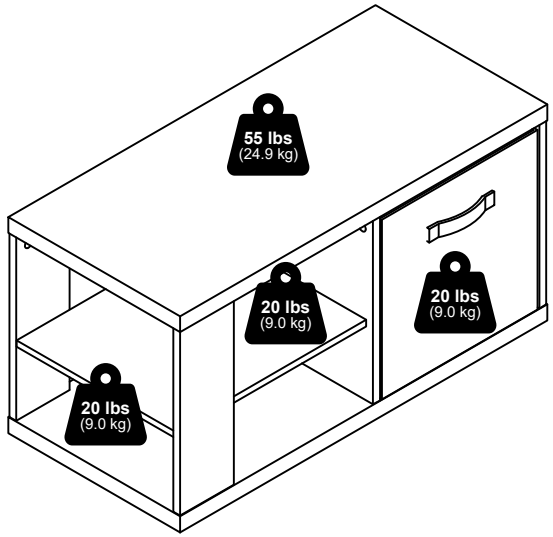

6

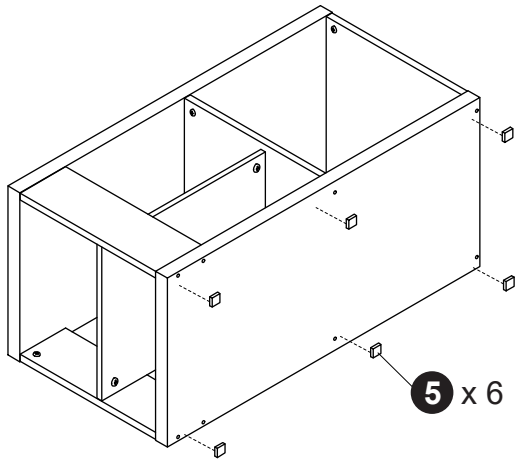

7

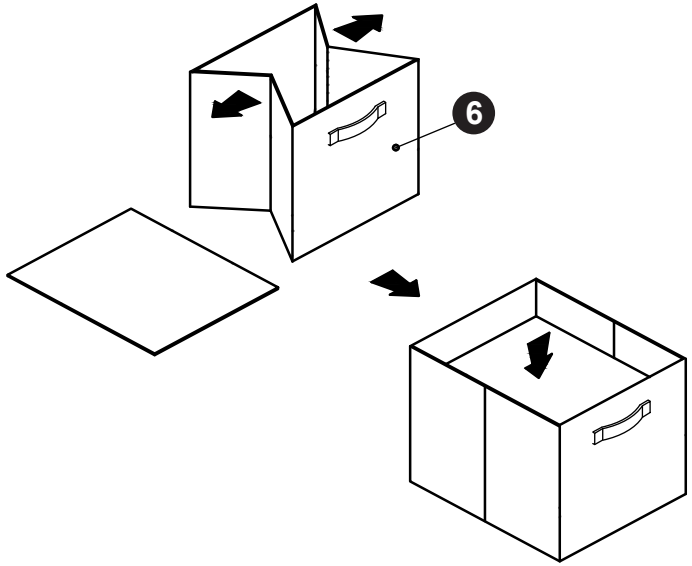

1

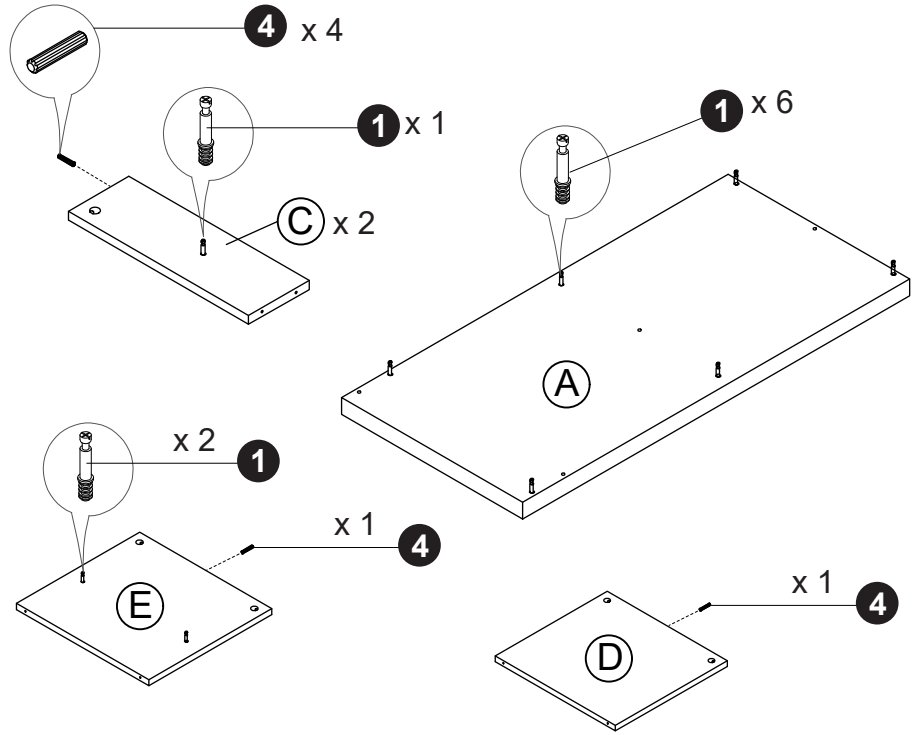

2

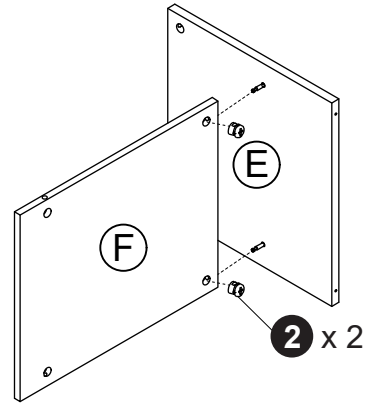

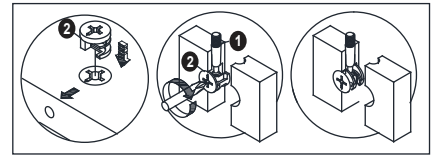

3

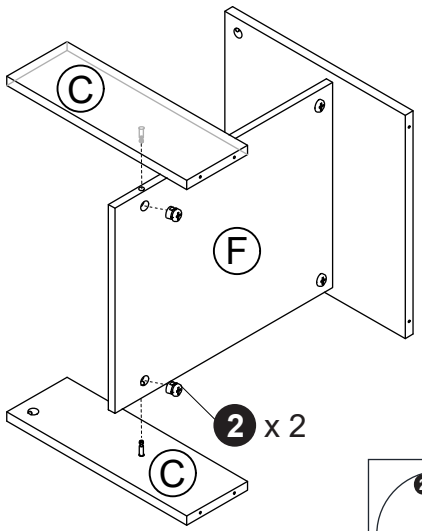

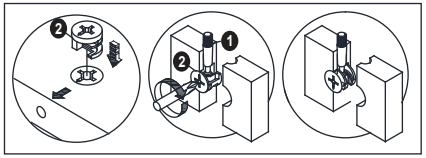

4

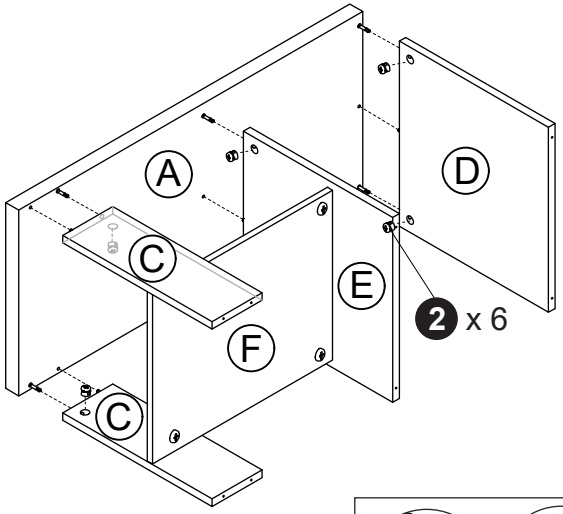

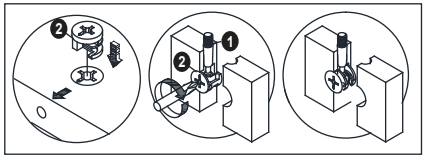

5

