6

THIS PRODUCT MUST ALWAYS BE MOUNTED A WALL OR STUD FOR USE.

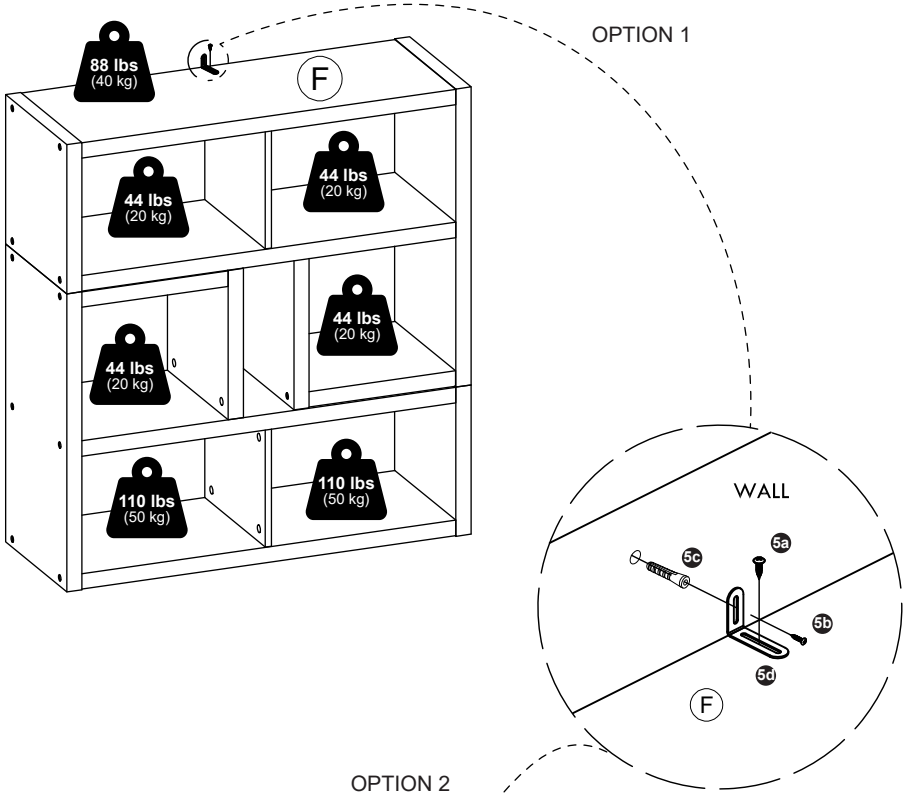







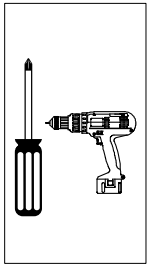

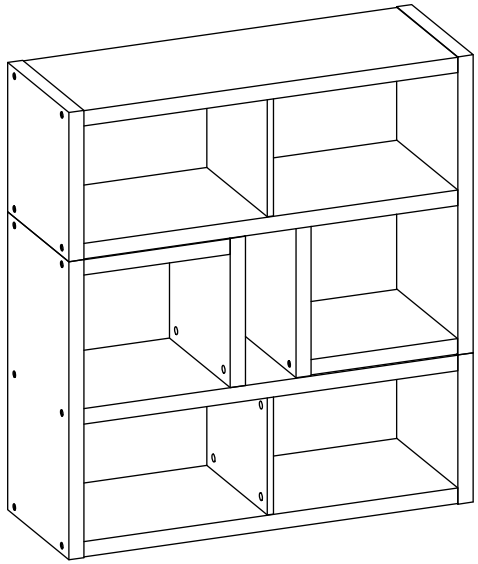

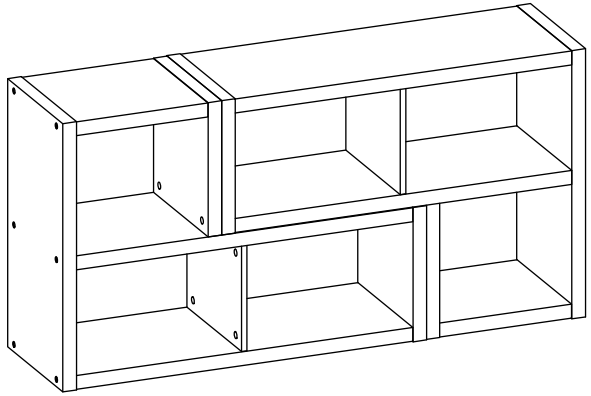

THIS PRODUCT MUST ALWAYS BE MOUNTED A WALL OR STUD FOR USE.

MODEL: 24277

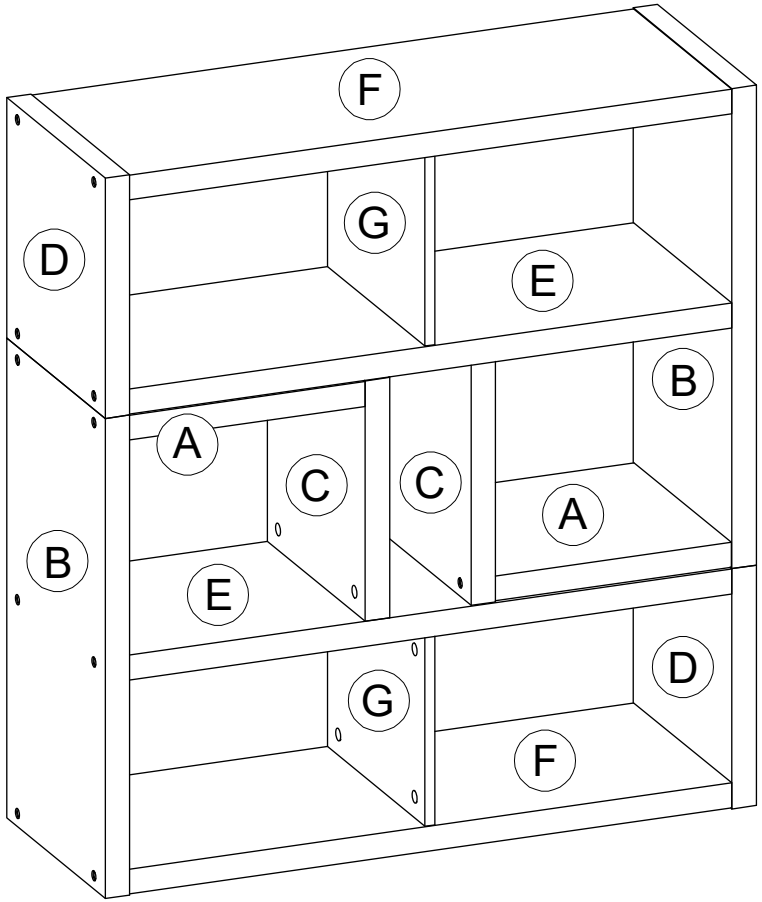

1 x 24



M7 x 75mm

2 x 1

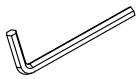

3 x 12

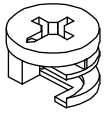

4 x 12

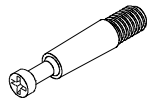

5 x 1

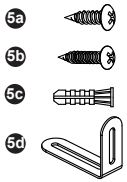

5

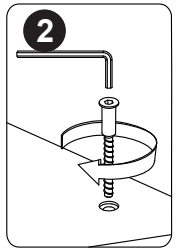

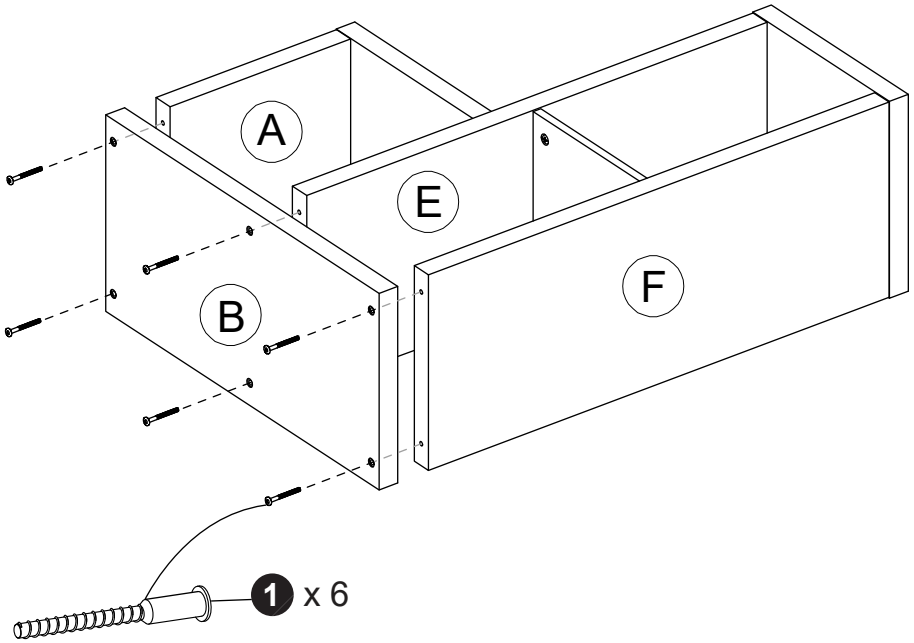

REPEAT x 2

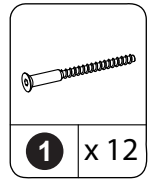

4

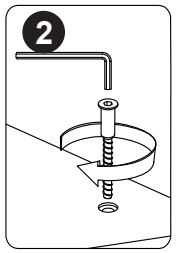

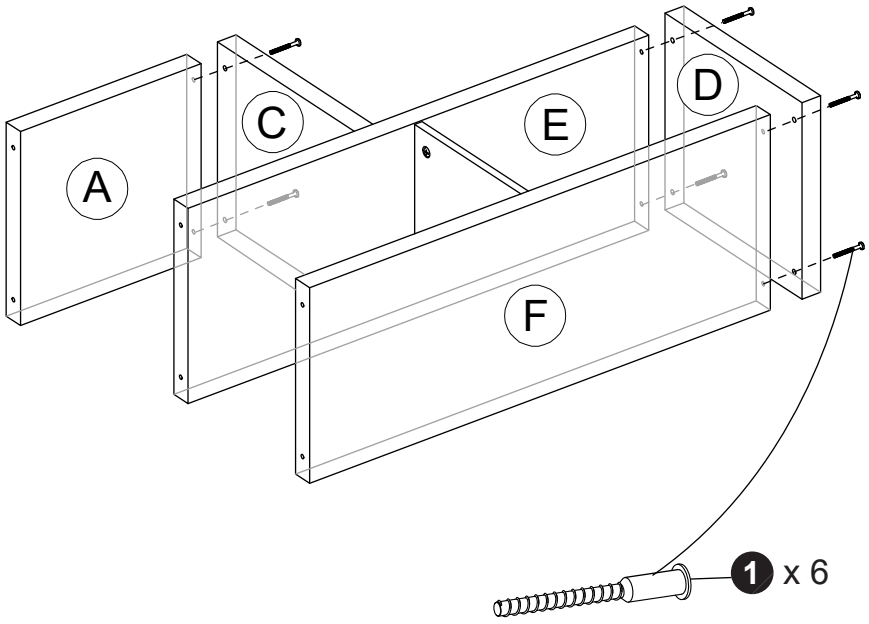

REPEAT x 2

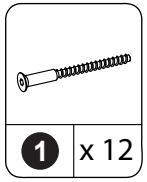

1

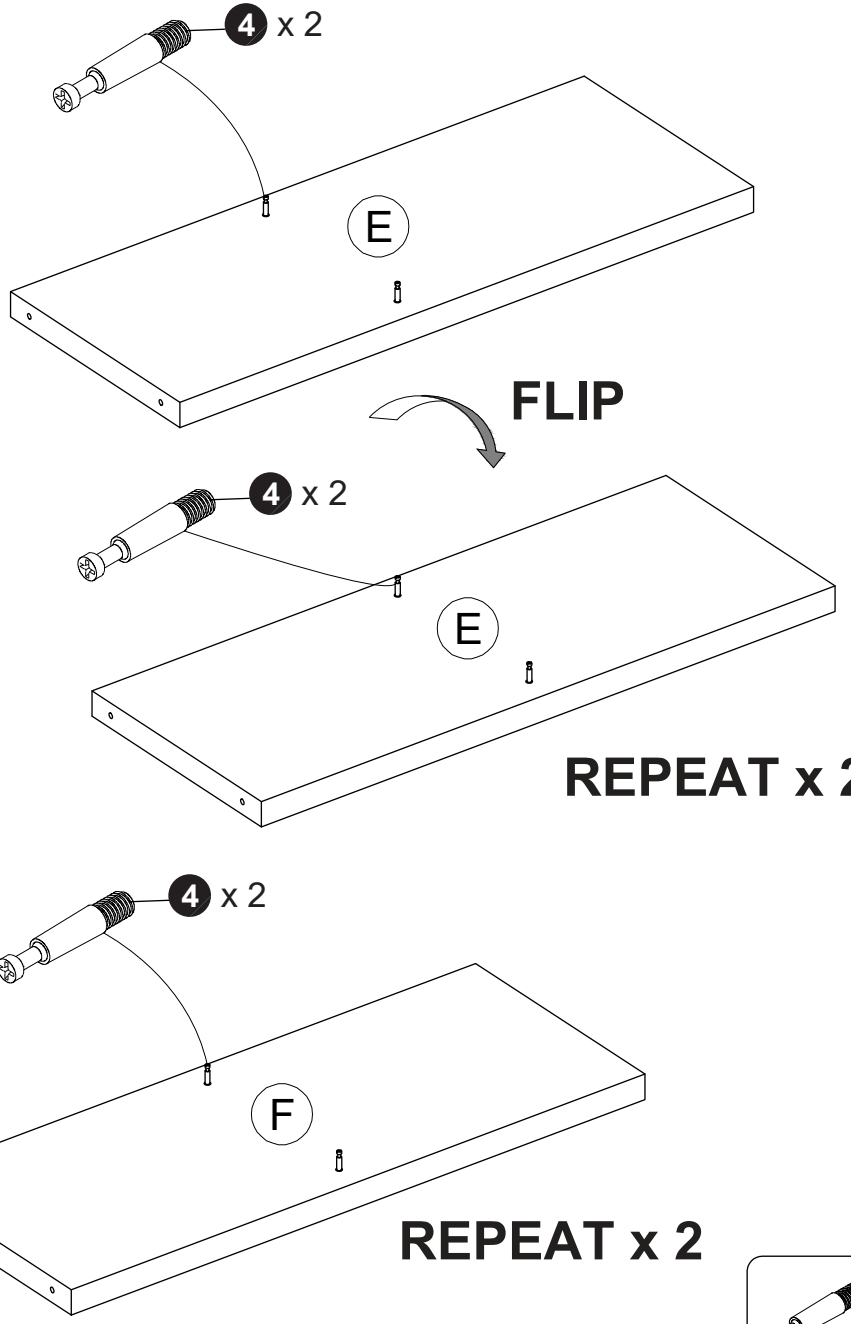

2

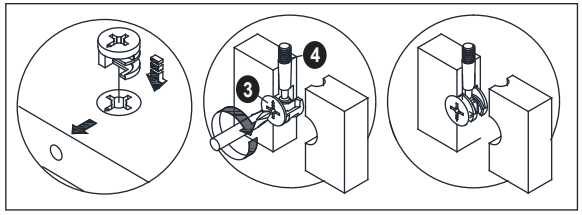

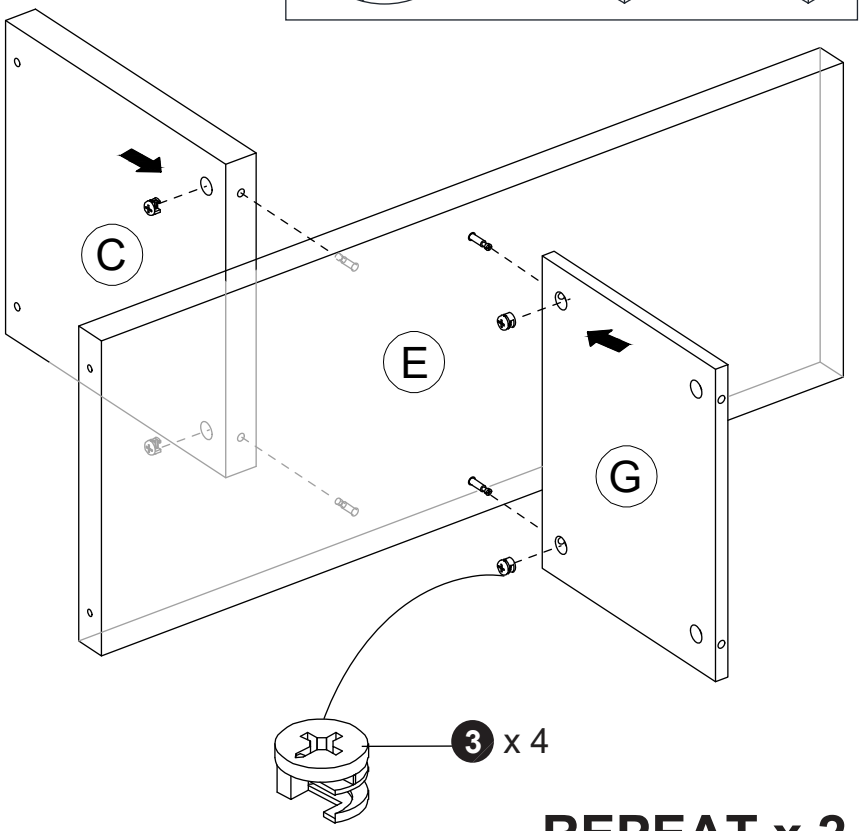

REPEAT x 2

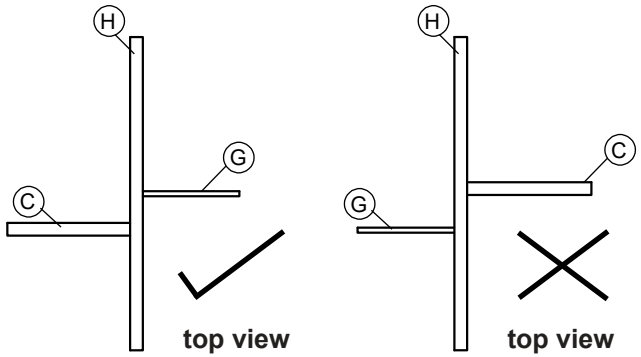

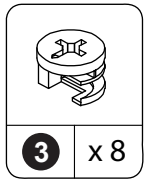

3

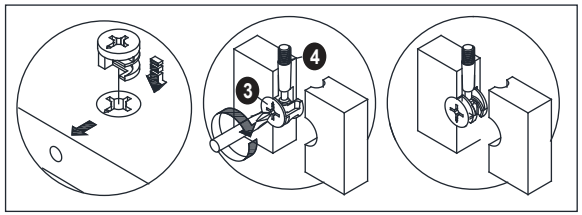

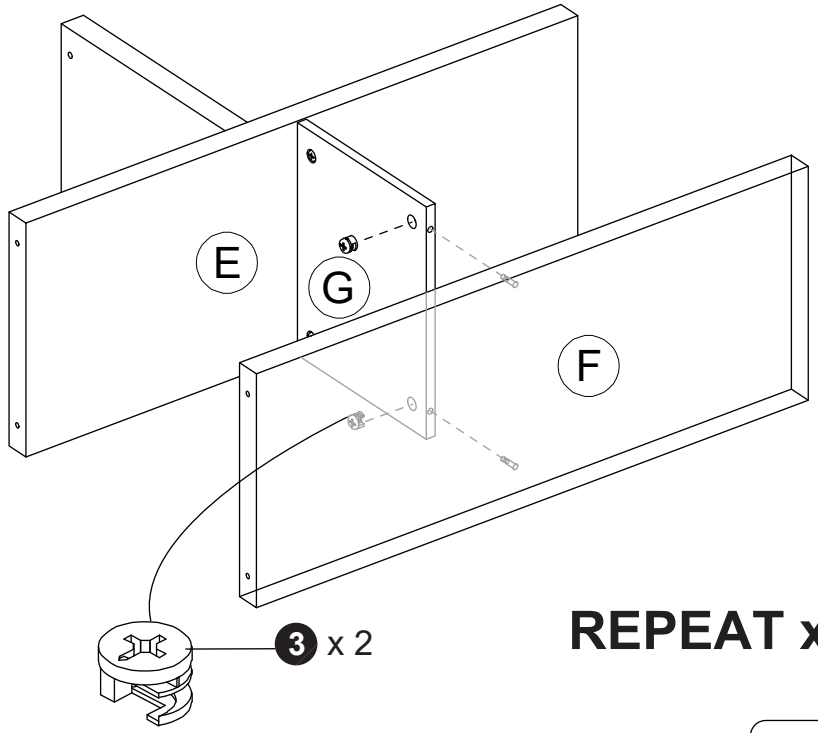

REPEAT x 2

