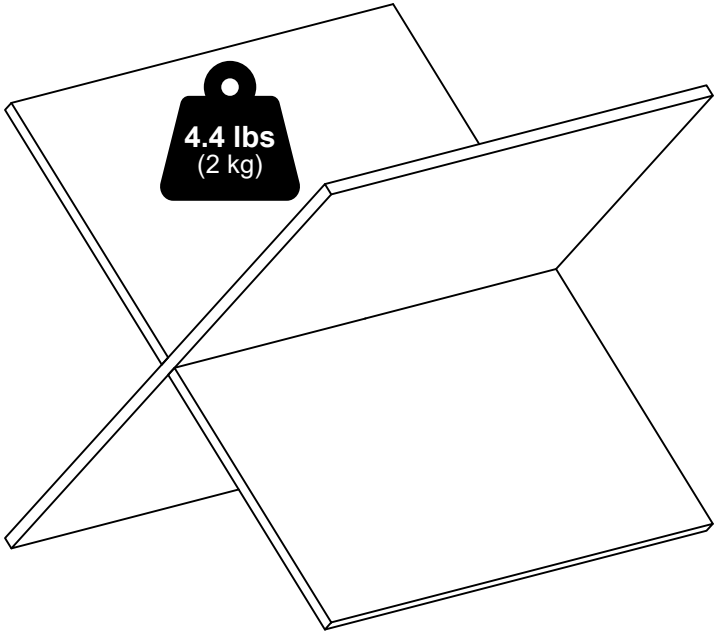

Furinno®

Fits Space, Fits Budget





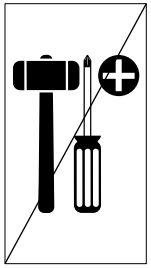

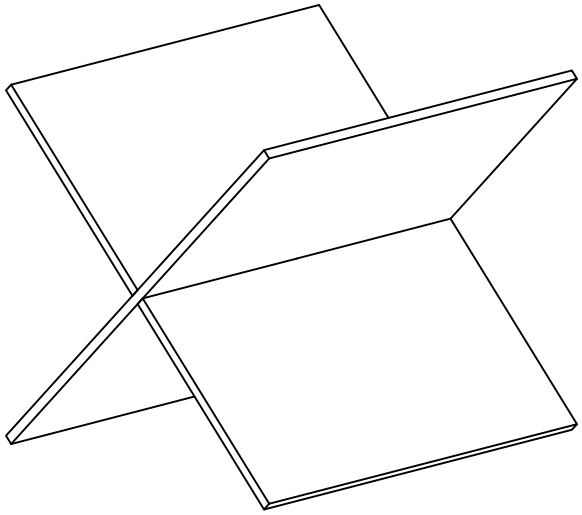

MODEL: 24281

support@furinno.com

www.furinno.com

2428120241002

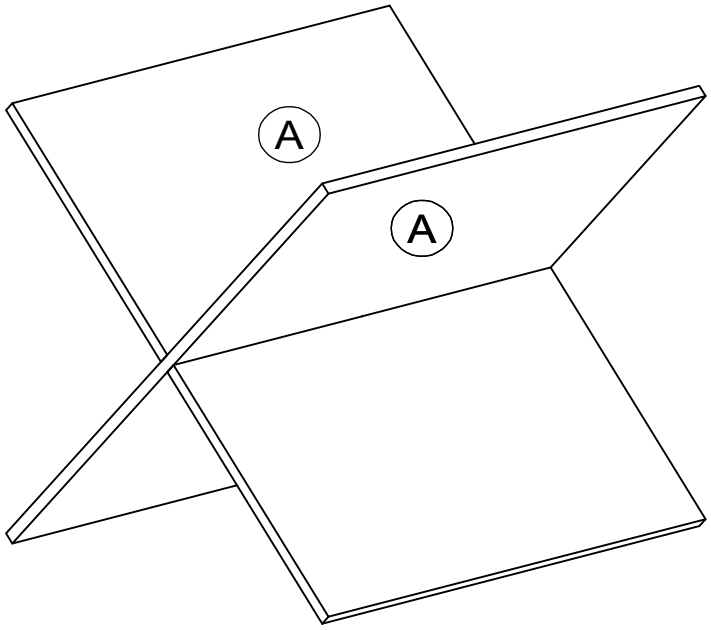

1

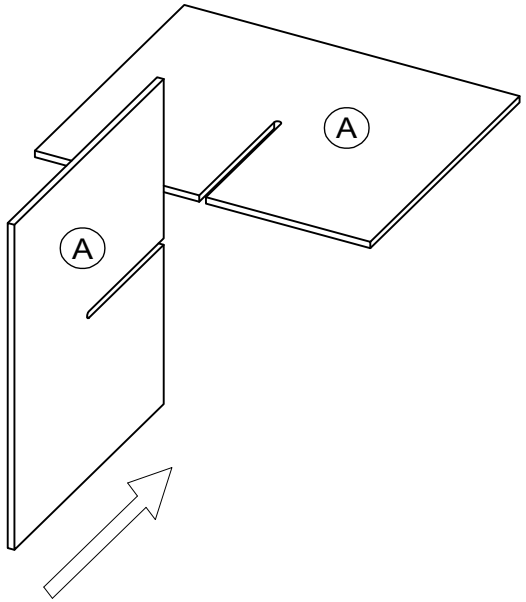

2

