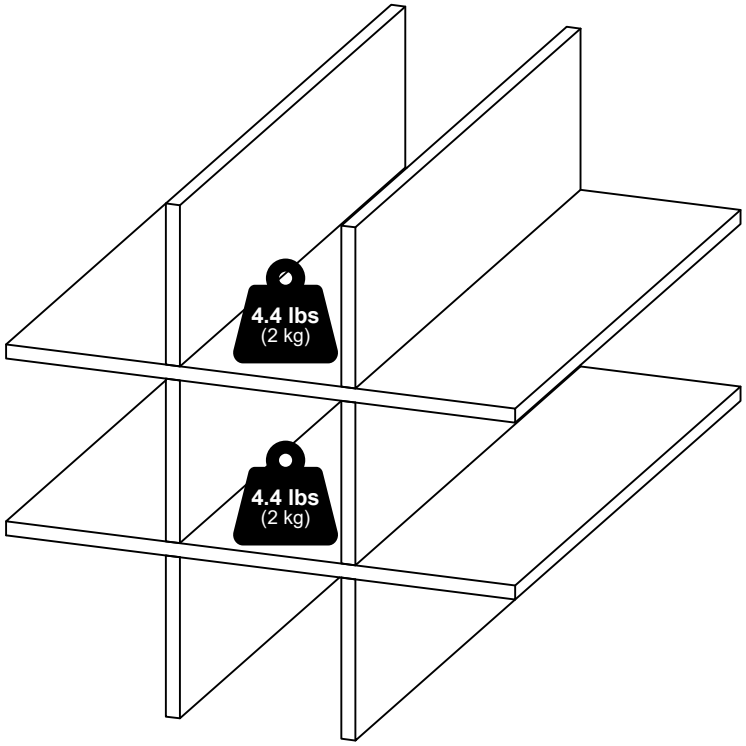

Furinno®

Fits Space, Fits Budget



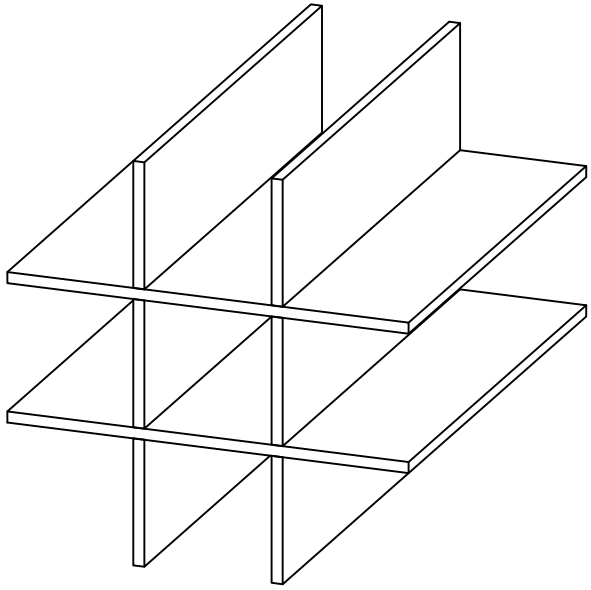

MODEL: 24282

support@furinno.com

www.furinno.com

2428220241002

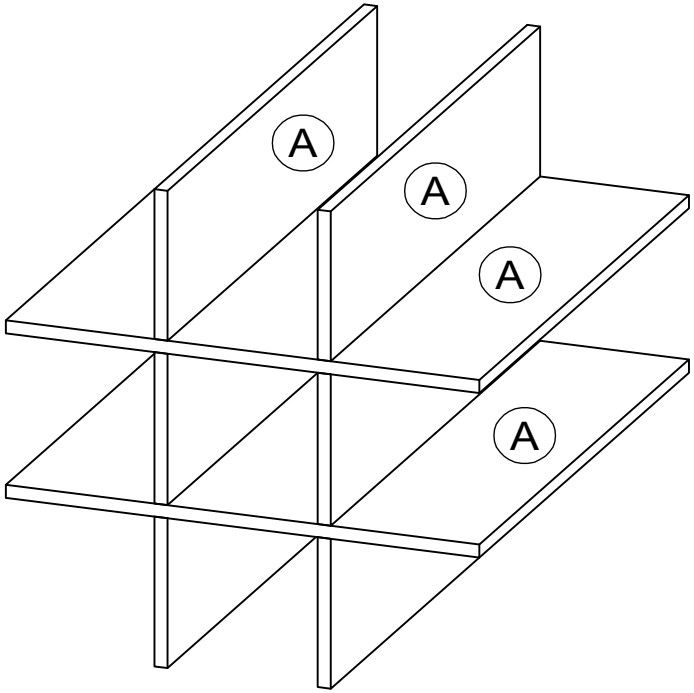

1

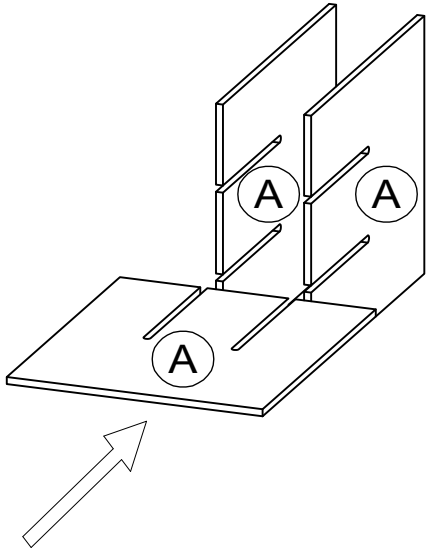

2

