3

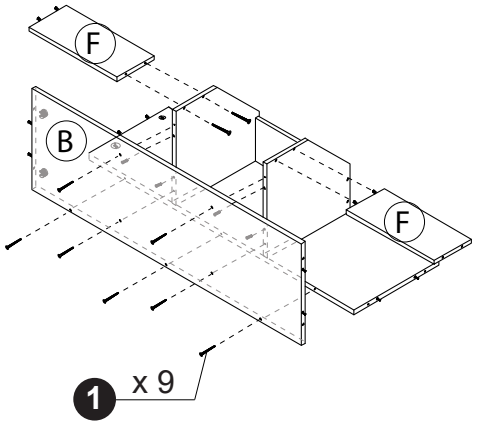

4

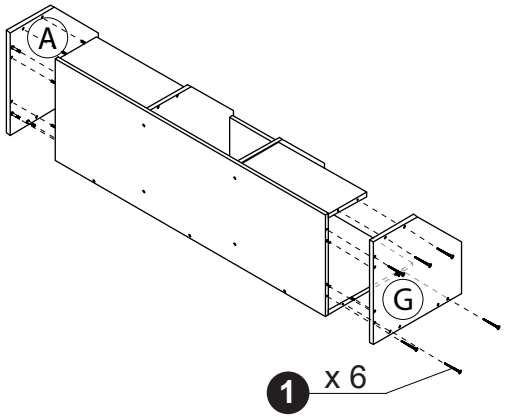

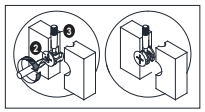

5

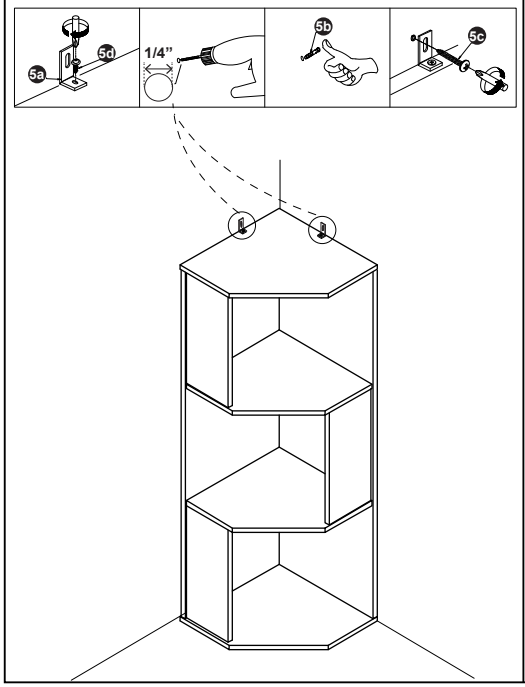

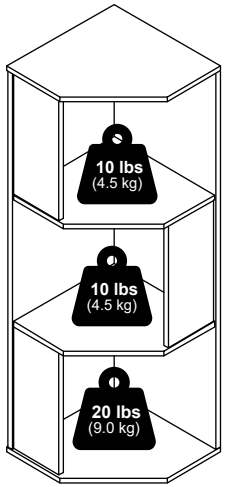



Furinno®

Fits Space, Fits Budget





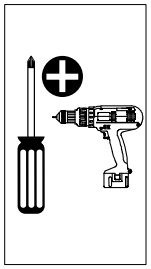

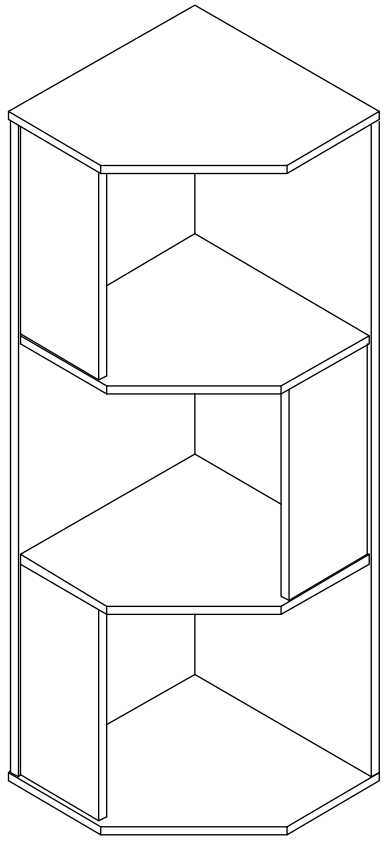

MODEL: 24334

support@furinno.com

www.furinno.com

2433420241008

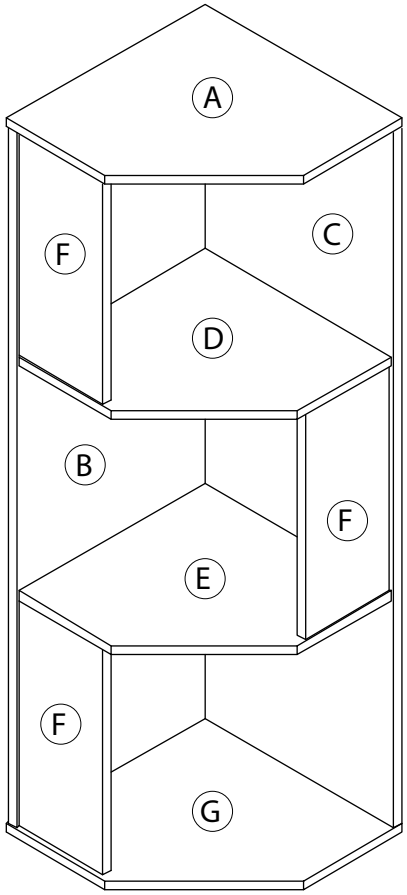

1 x 21 M4 x 32mm	2 x 4 15mm	3 x 4 8 x 24mm
4 x 22 M6 x 20mm	5 x 2 5a 16 x 28mm 5b 1 1/4" 5c #8 x 1" 5d 4 x 11mm	

1

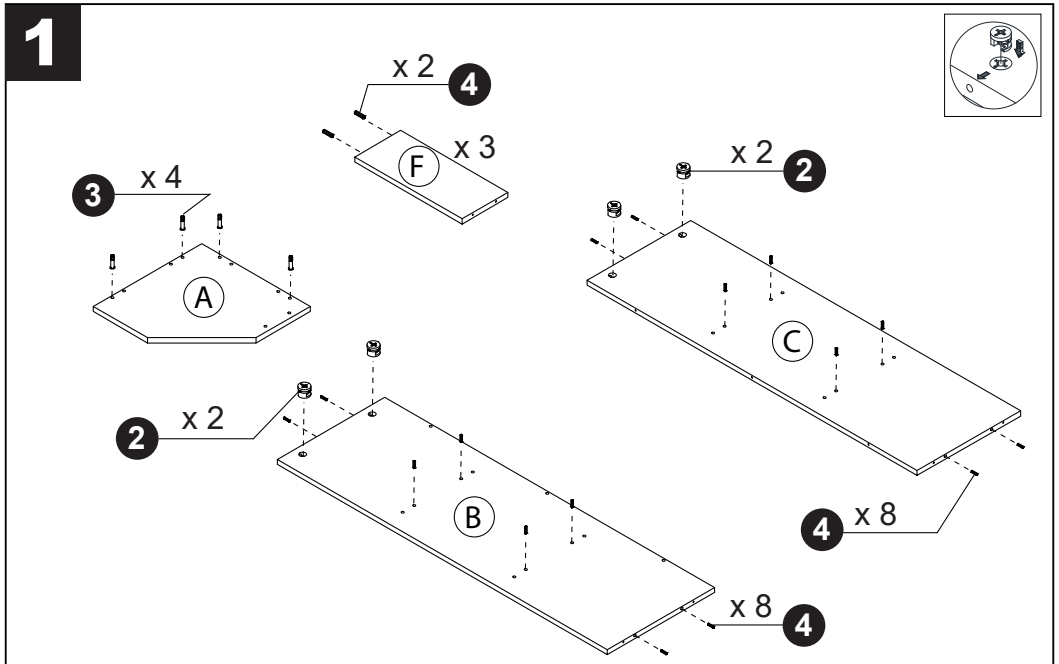

2

