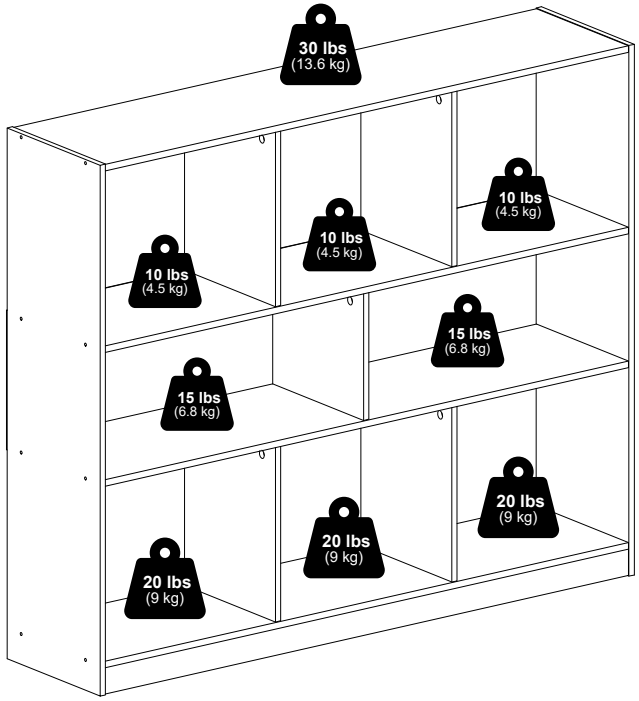

Furinno®

Fits Space, Fits Budget



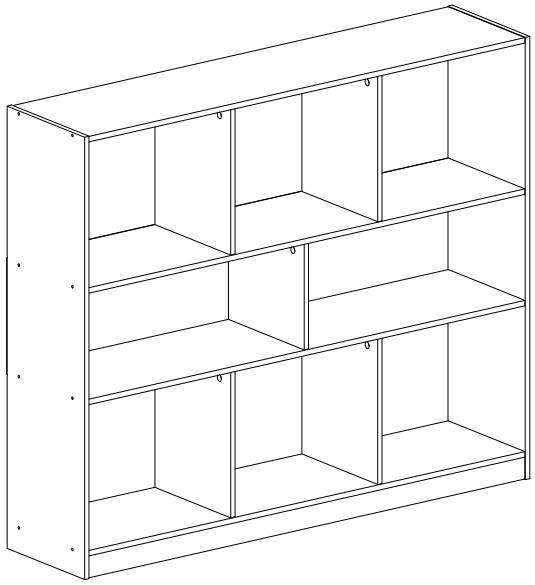

MODEL: 24345

support@furinno.com

www.furinno.com

2434520250120

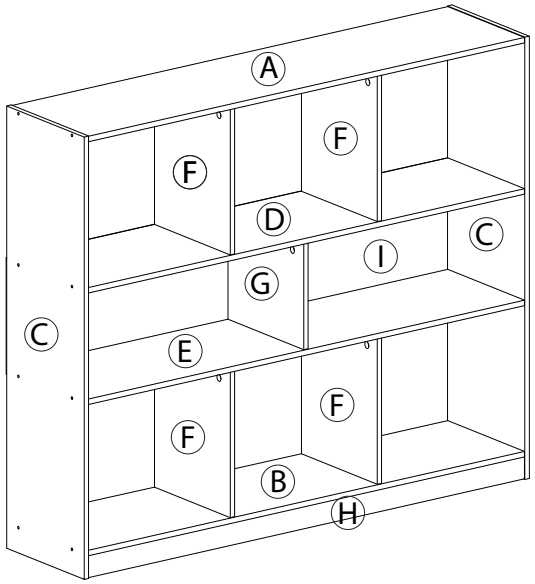

1 x 26  M4 x 32mm	**2** x 10  15mm	**3** x 10 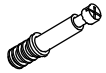 M6 x 31mm	**4** x 3  17 x 22mm
5 x 6  M4 x 11mm	**6** x 22 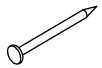 2.5 x 18mm	**7** x 1 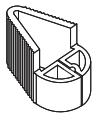	**8** x 2  8a 16 x 28mm 8b 1/1/4" 8c #8 x 1" 8d M4 x 11mm

8

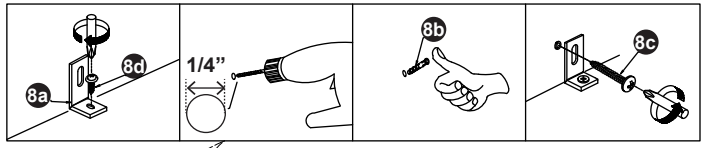

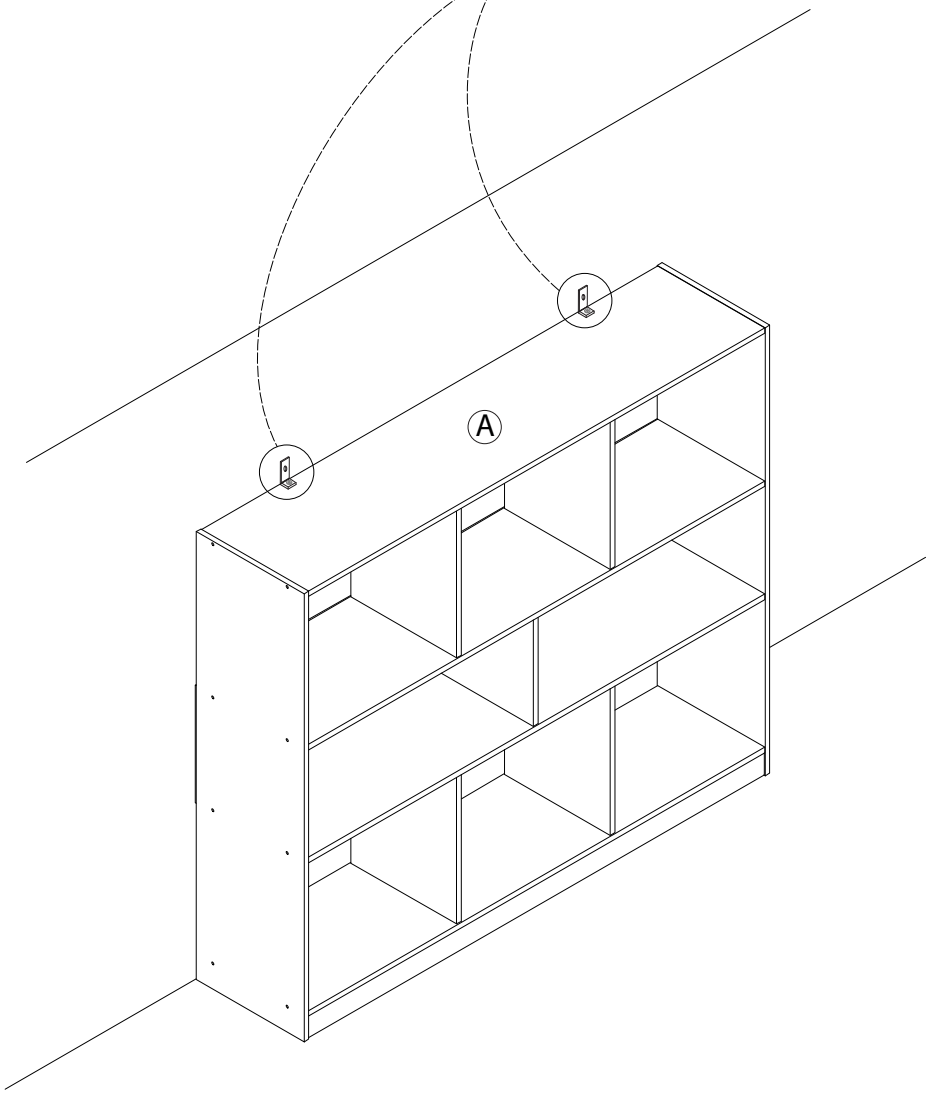

7

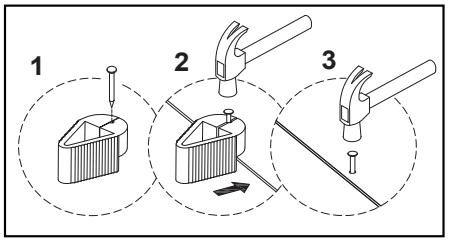

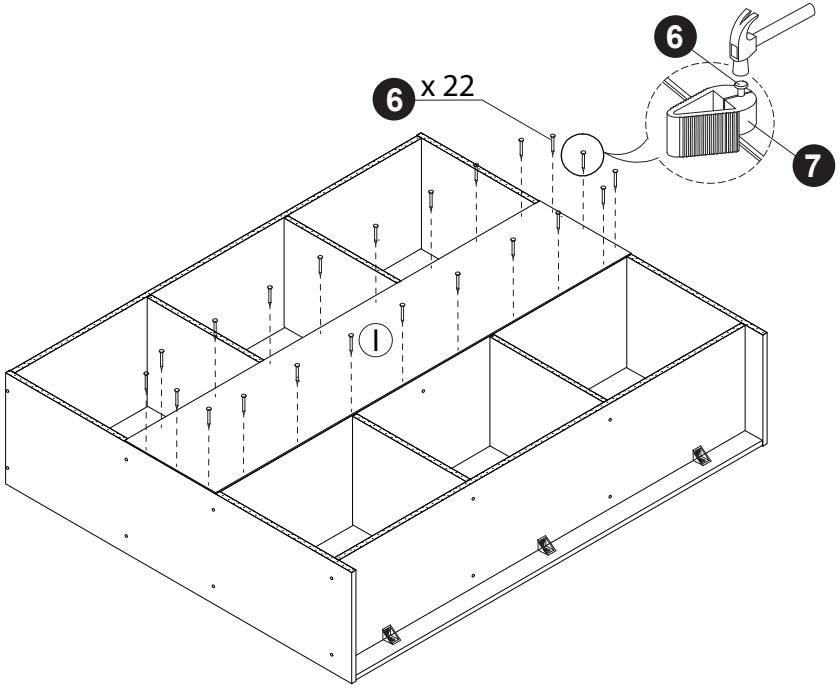

1

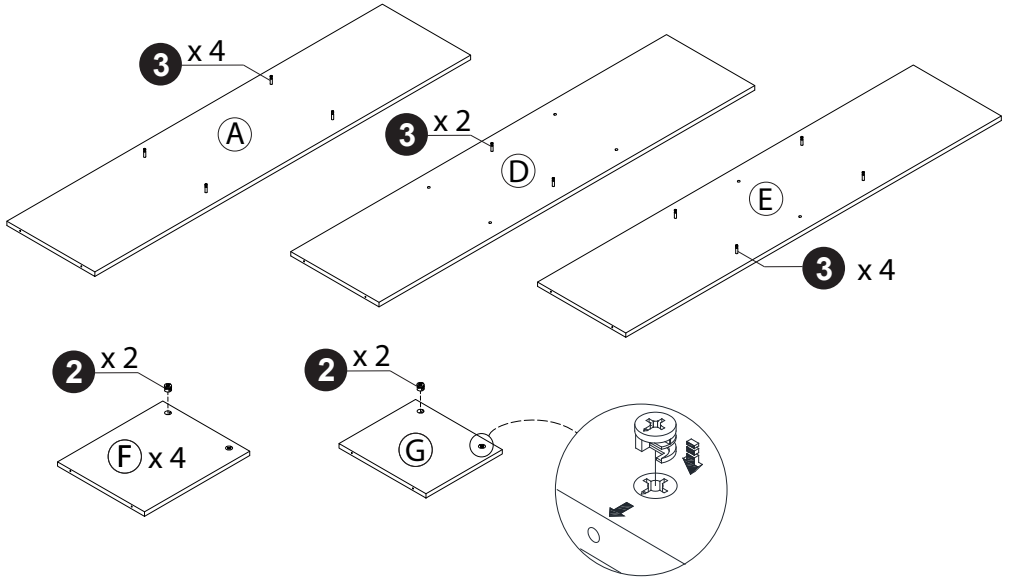

2

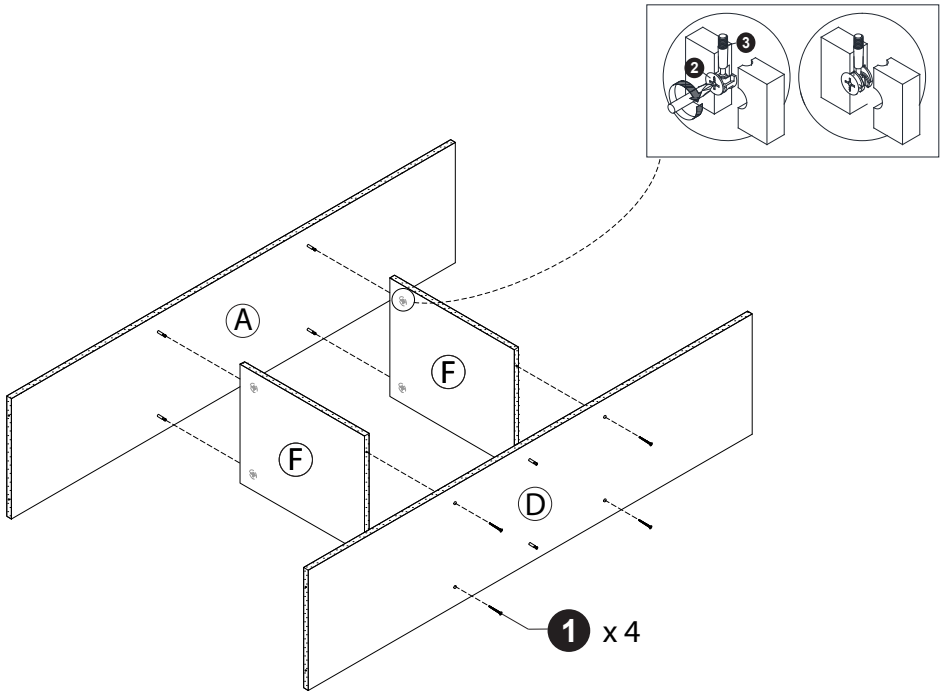

3

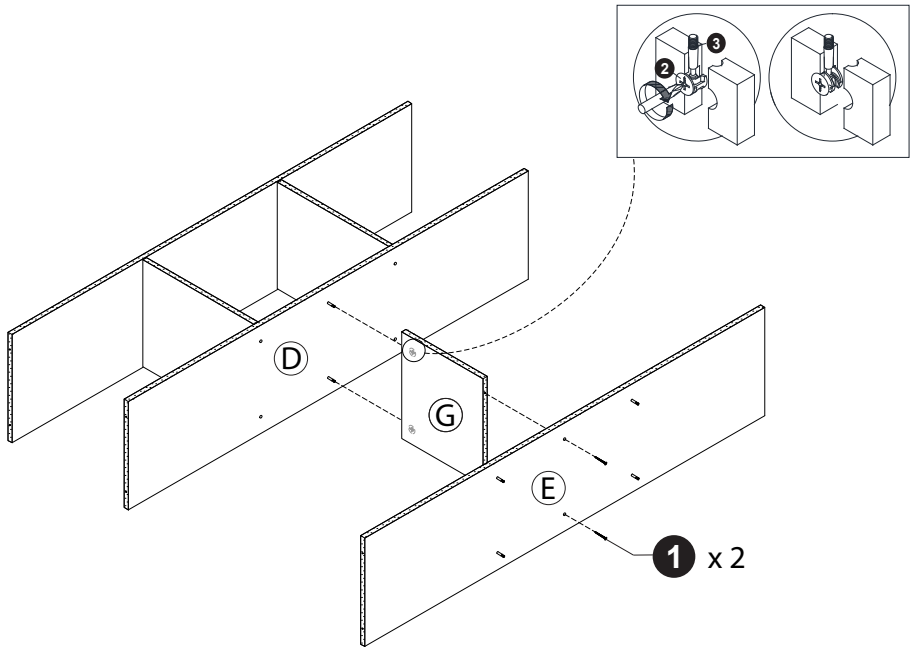

4

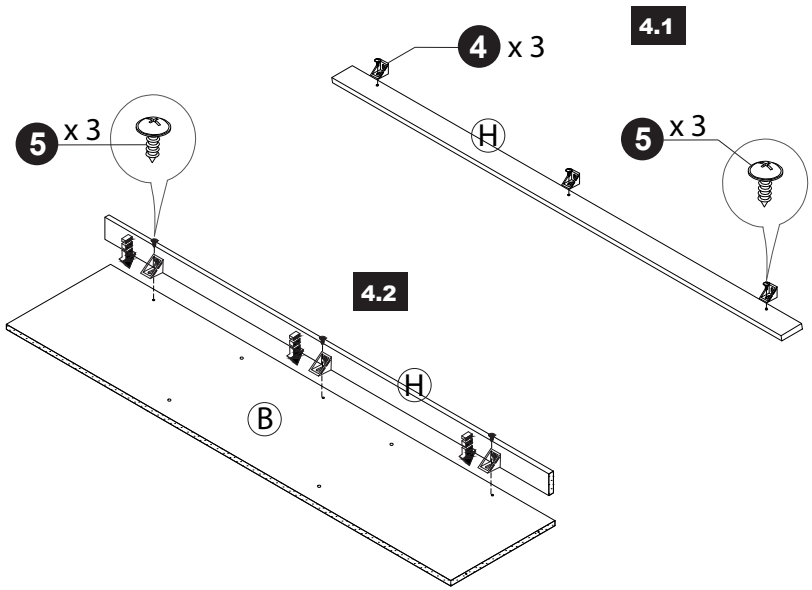

5

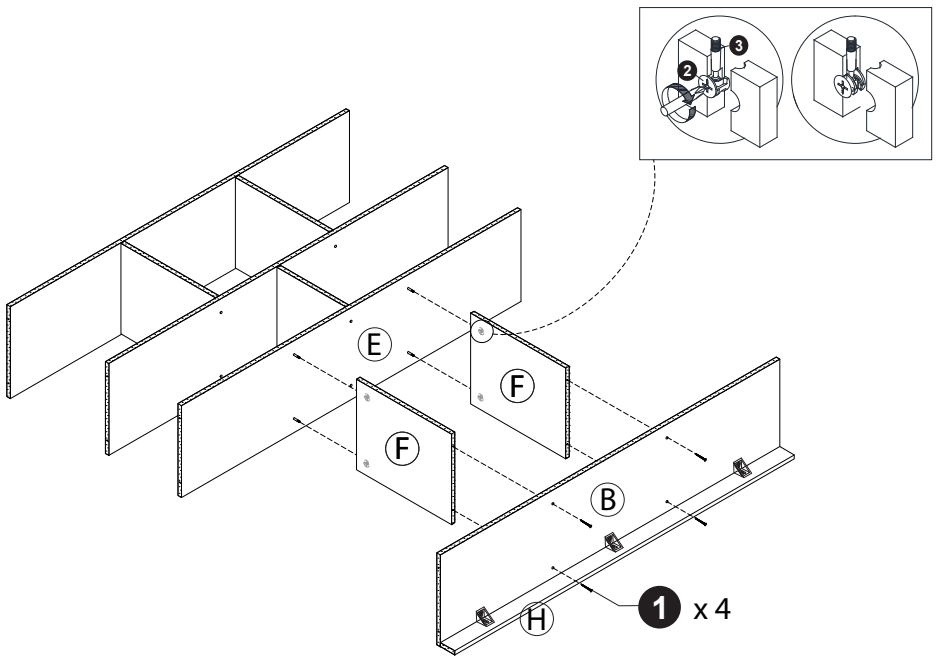

6

