Furinno®

Fits Space, Fits Budget

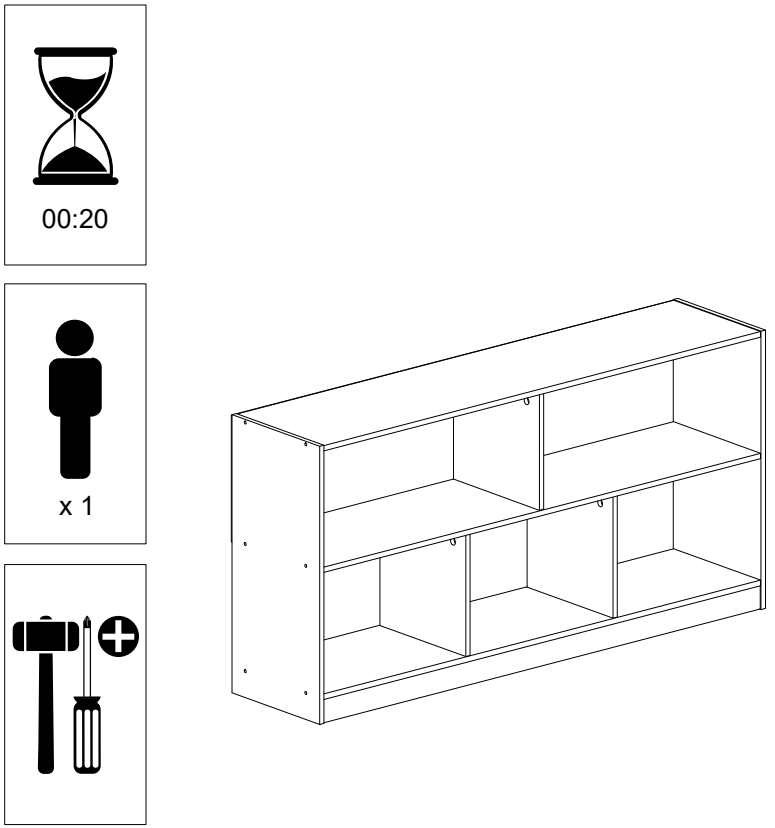

MODEL: 24346

support@furinno.com

www.furinno.com

2434620250222

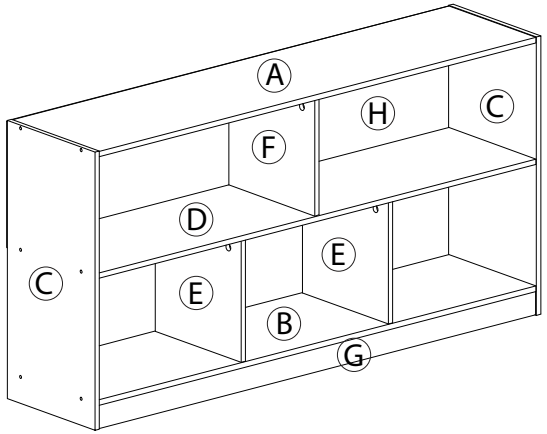

1 x 18  M4 x 32mm	**2** x 6  15mm	**3** x 6 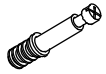 M6 x 31mm	**4** x 3  17 x 22mm
5 x 6  M4 x 11mm	**6** x 22 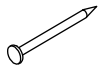 2.5 x 18mm	**7** x 1 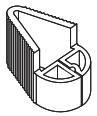	



6

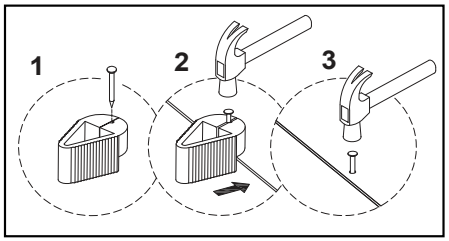

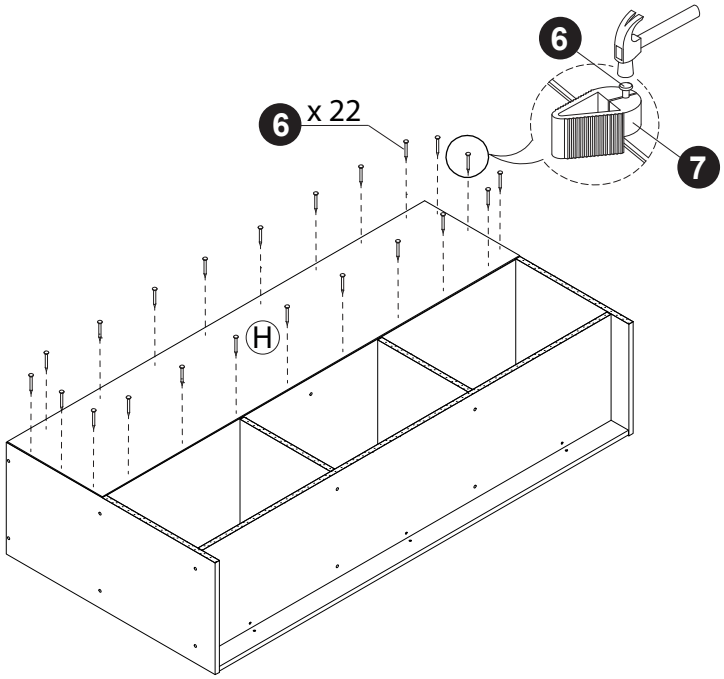

1

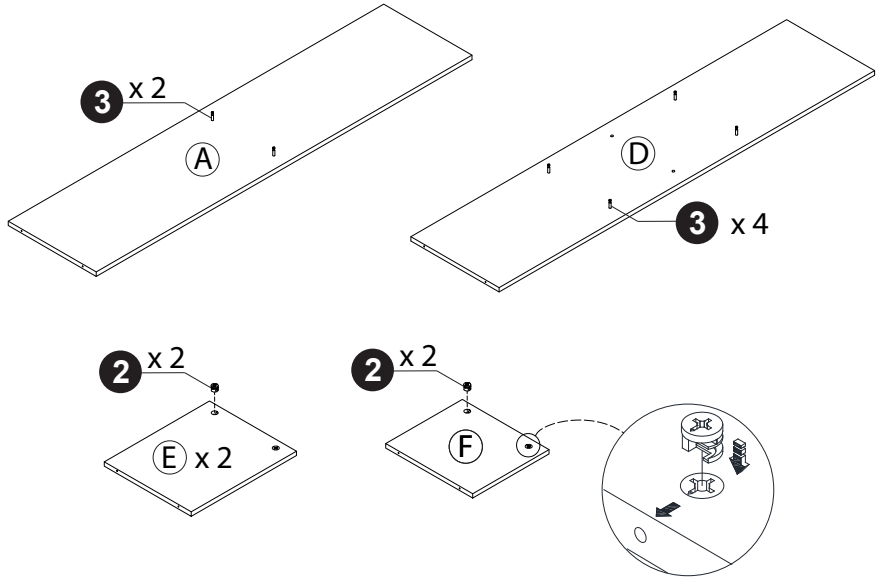

2

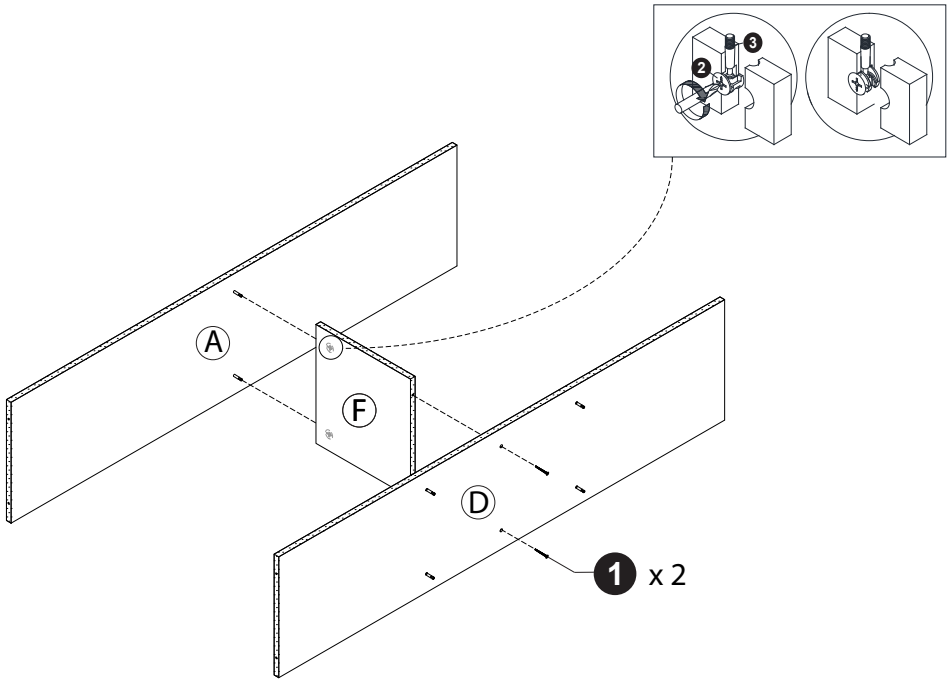

3

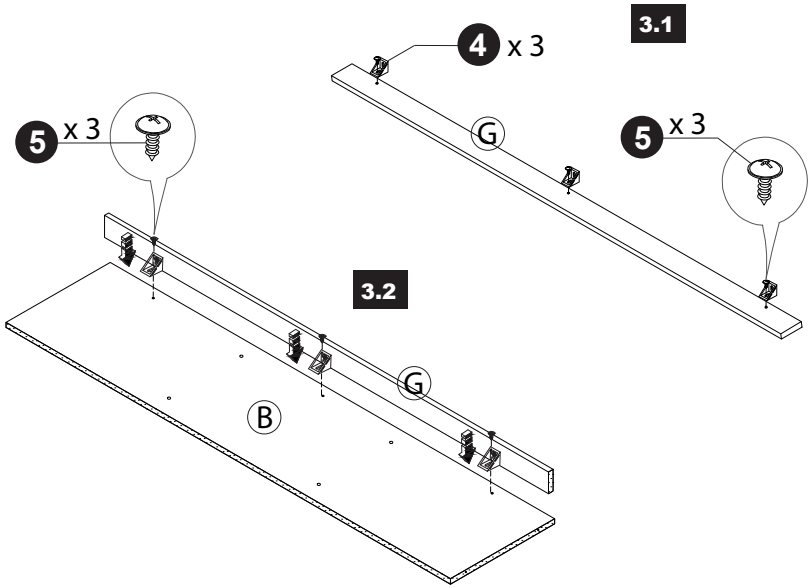

4

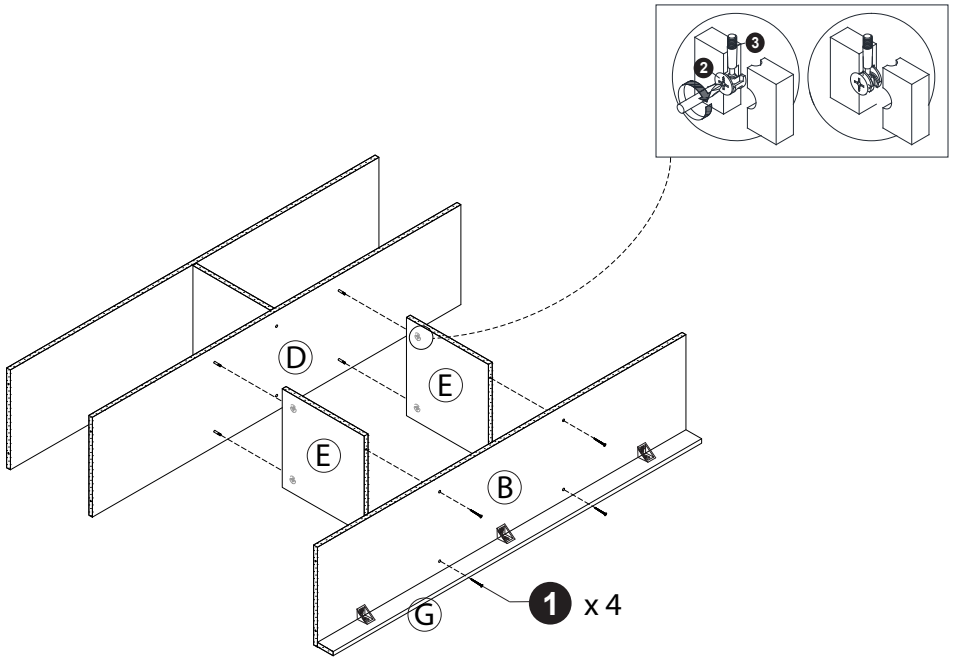

5

