10

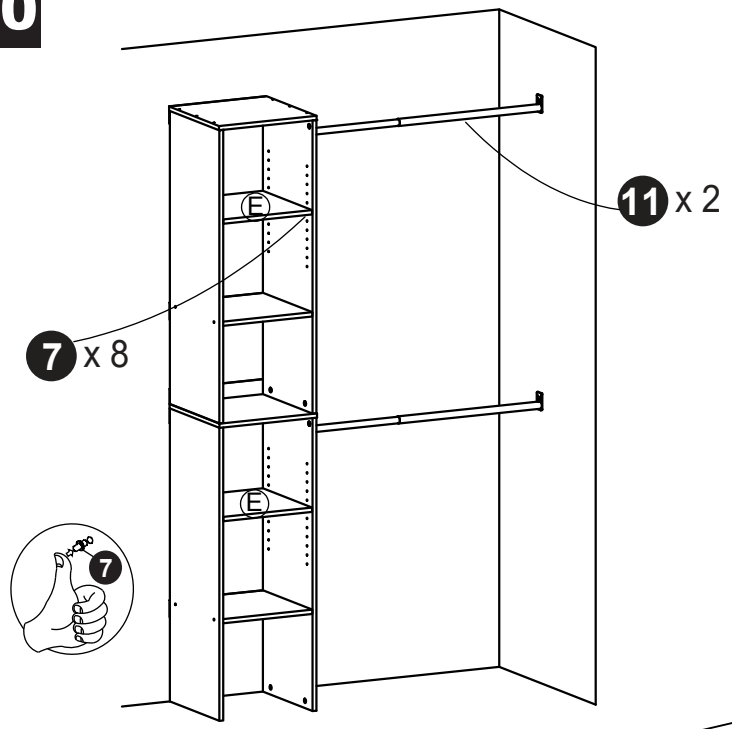

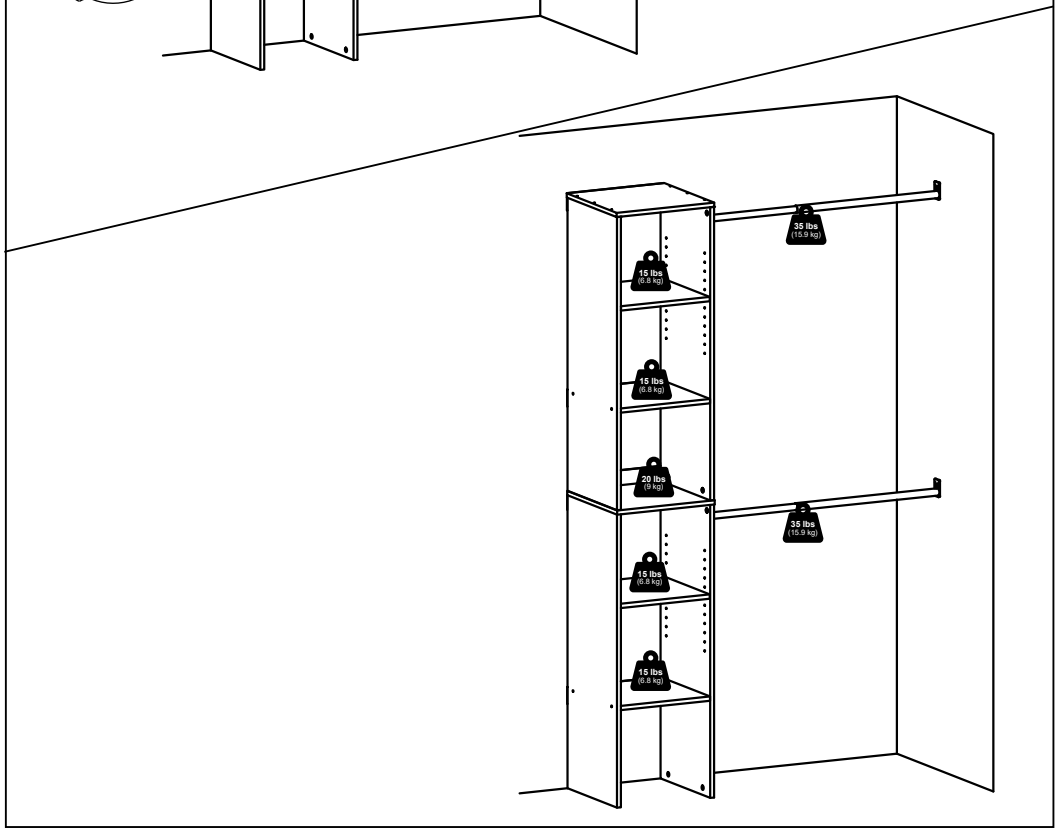

Furinno®

Fits Space, Fits Budget



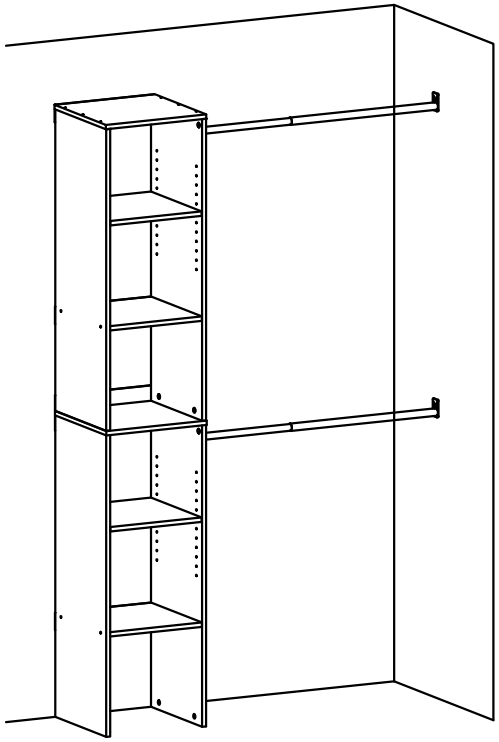

MODEL: 24360

support@furinno.com

www.furinno.com

2436020241226

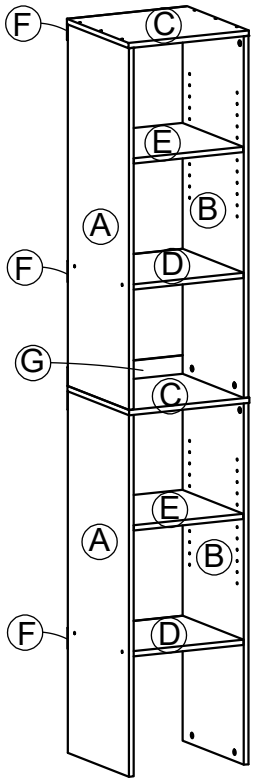

1 x 12 6 x 31 mm	**2** x 12 15 mm	**3** x 8 M4 x 38mm	**4** x 2 M5 x 50mm
5 x 4 5a M4 x 16mm 5b 1/1/4” 5c M4 x 32mm	**6** x 4 6a 16 x 28mm 6b 1/1/4” 6c #8 x 1” 6d 4 x 11 mm	**7** x 8 5 x 6 x 16mm	**8** x 1
9 x 36 4 x 20 mm	**10** x 4	**11** x 2 11b 11a	

9

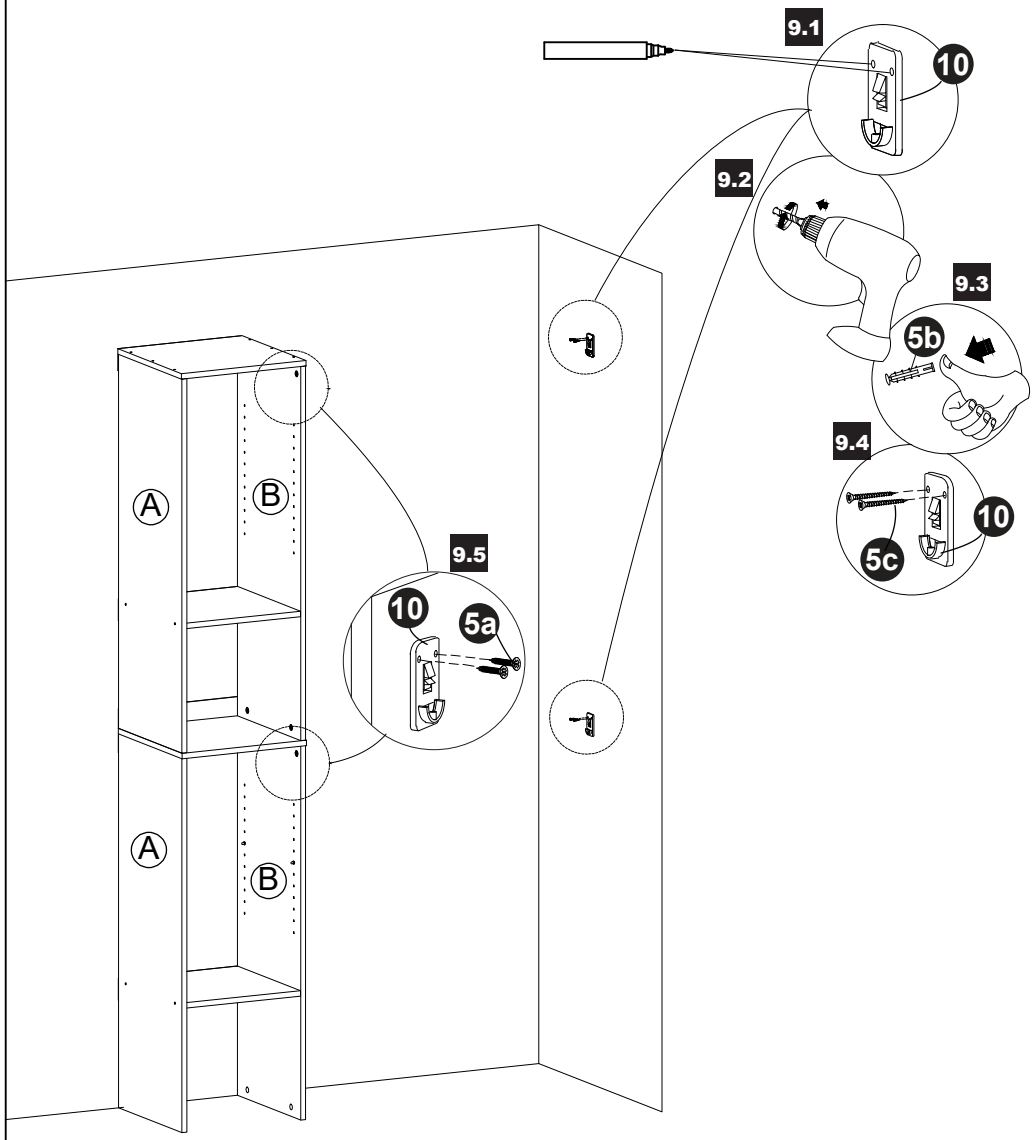

7

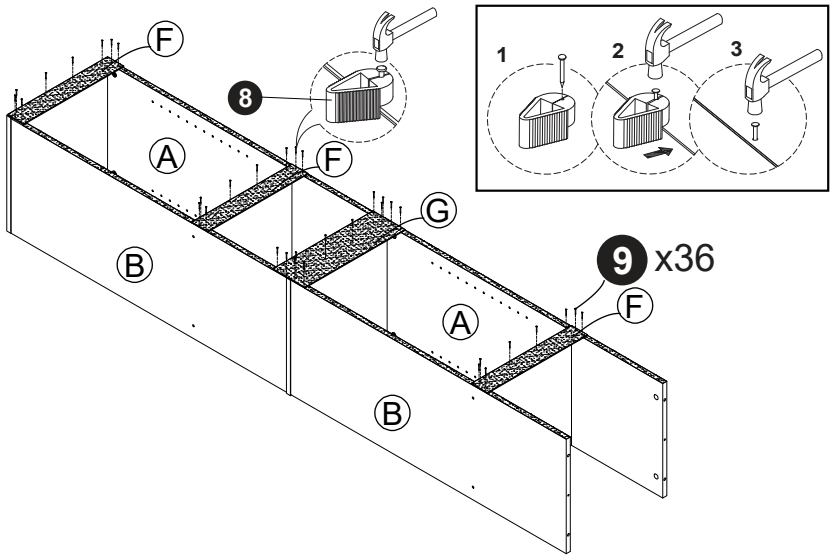

8

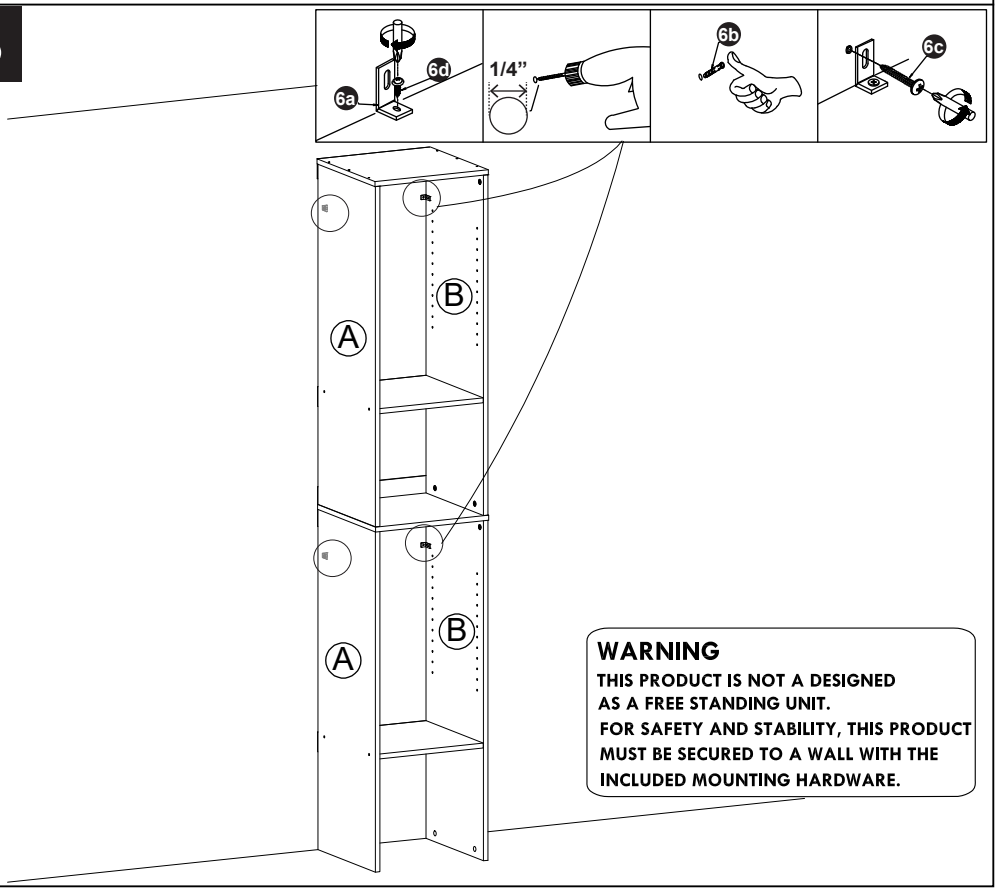

WARNING

THIS PRODUCT IS NOT A DESIGNED AS A FREE STANDING UNIT. FOR SAFETY AND STABILITY, THIS PRODUCT MUST BE SECURED TO A WALL WITH THE INCLUDED MOUNTING HARDWARE.

1

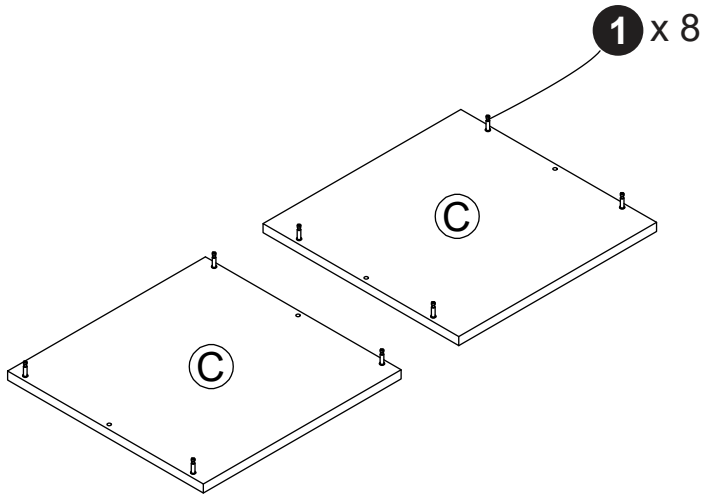

2

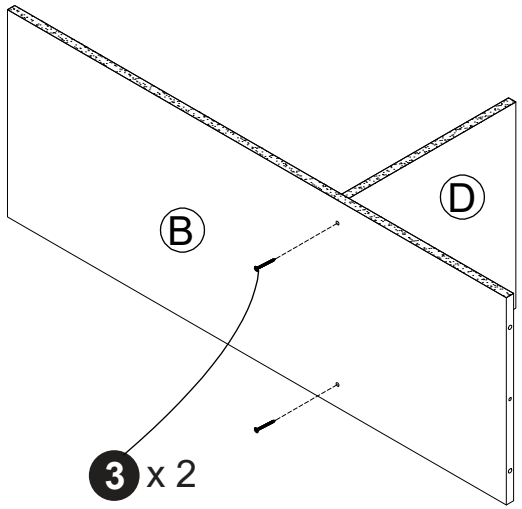

x 2

3

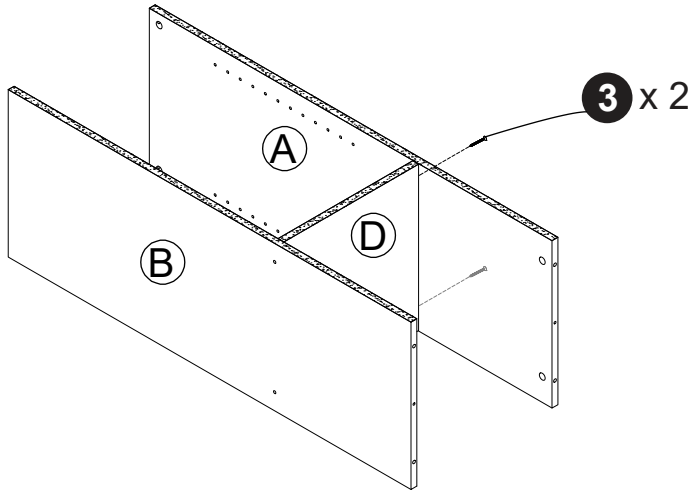

x 2

4

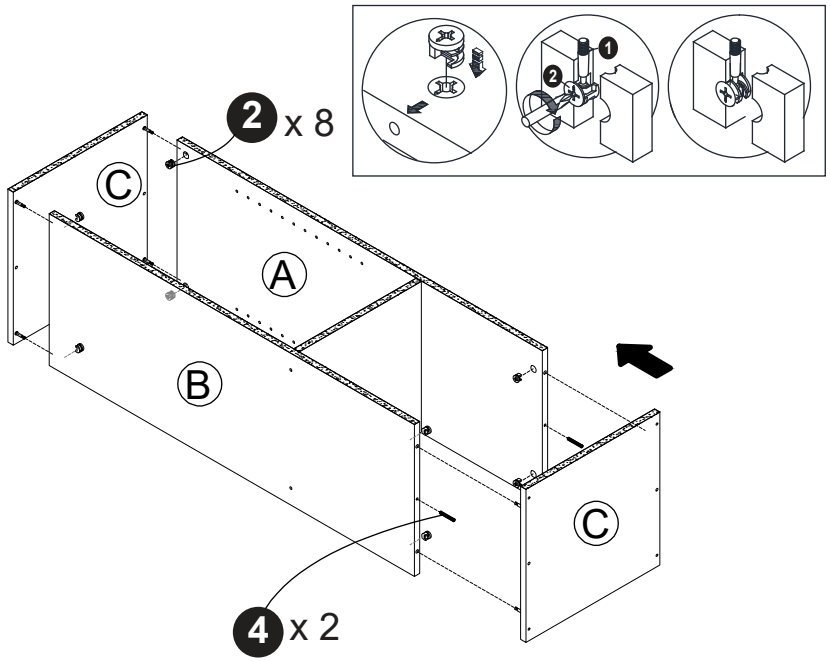

5

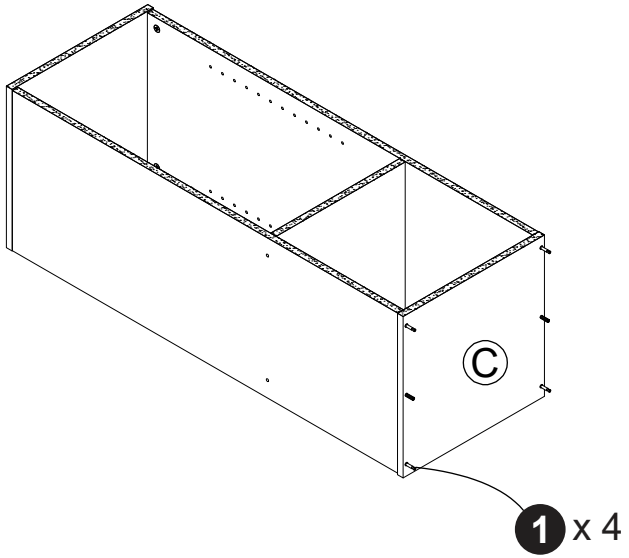

6

