Furinno®

Fits Space, Fits Budget





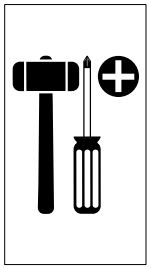

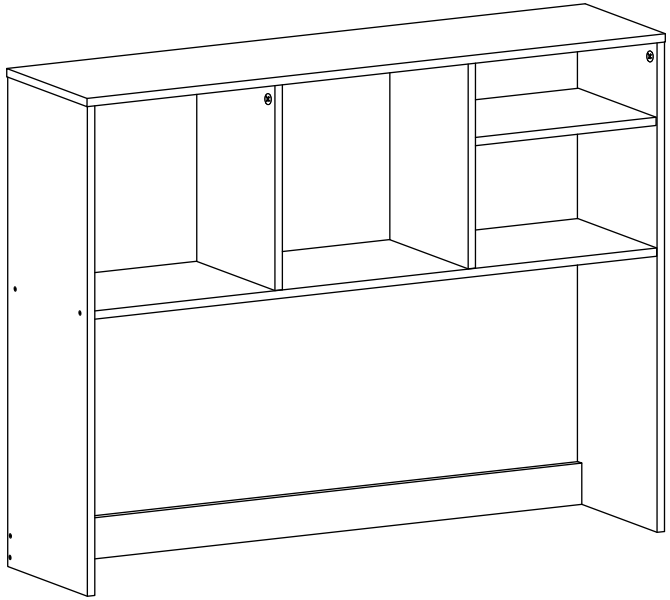

MODEL: 24387

support@furinno.com

www.furinno.com

2438720241226

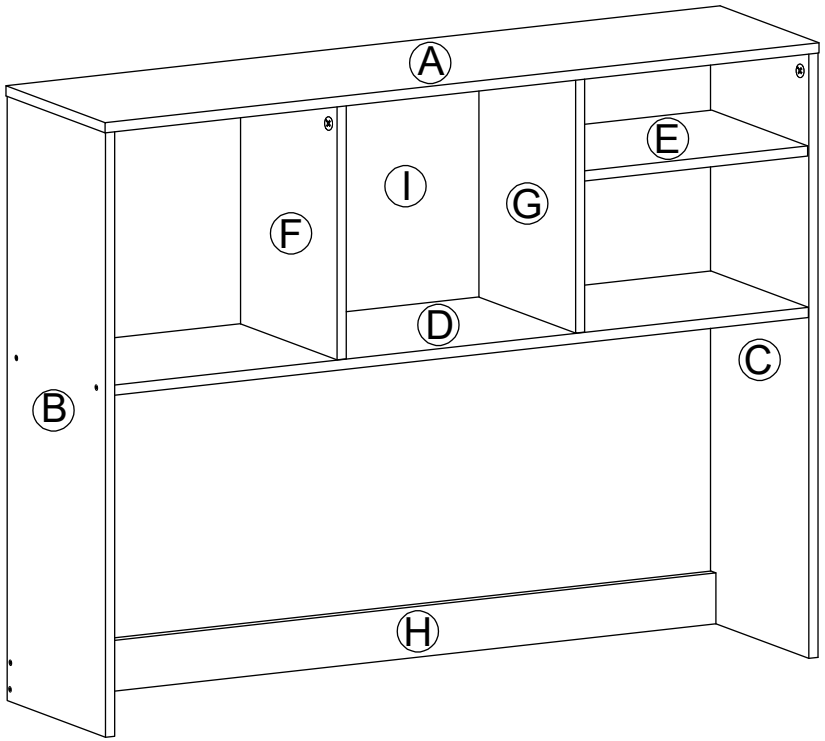

1 x 12 15 mm	**2** x 12 6 x 31 mm	**3** x 12 M4 x 32mm
4 x 20 4 x 20 mm	**5** x 1	**6** x 2 6a 16 x 28mm 6b 1/1/4” 6c #8 x 1” 6d 4 x 11 mm

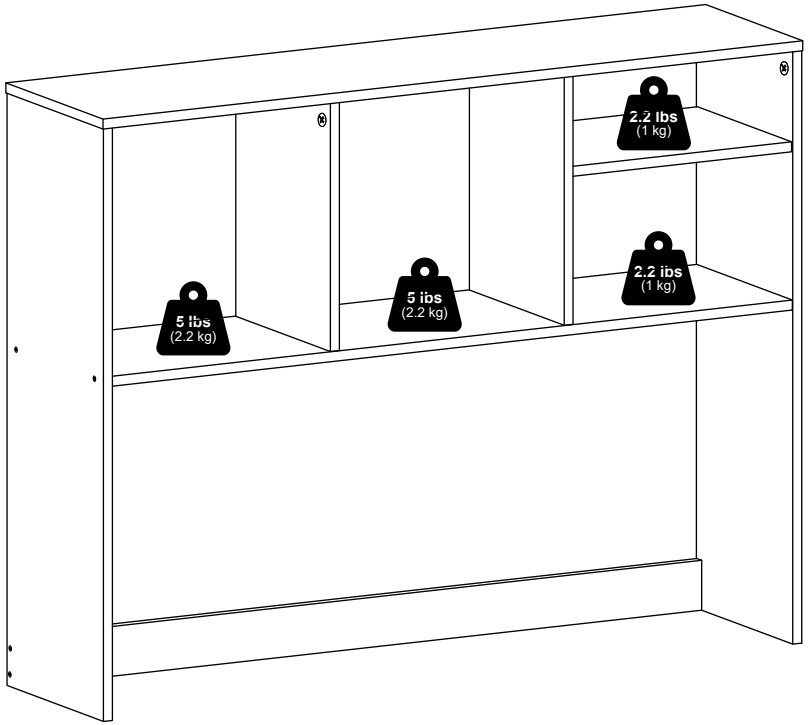

7

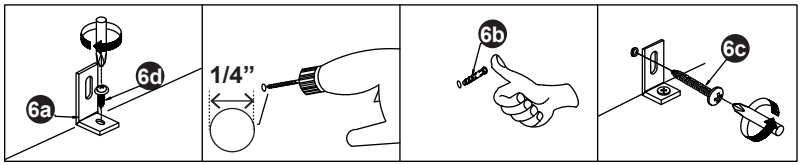

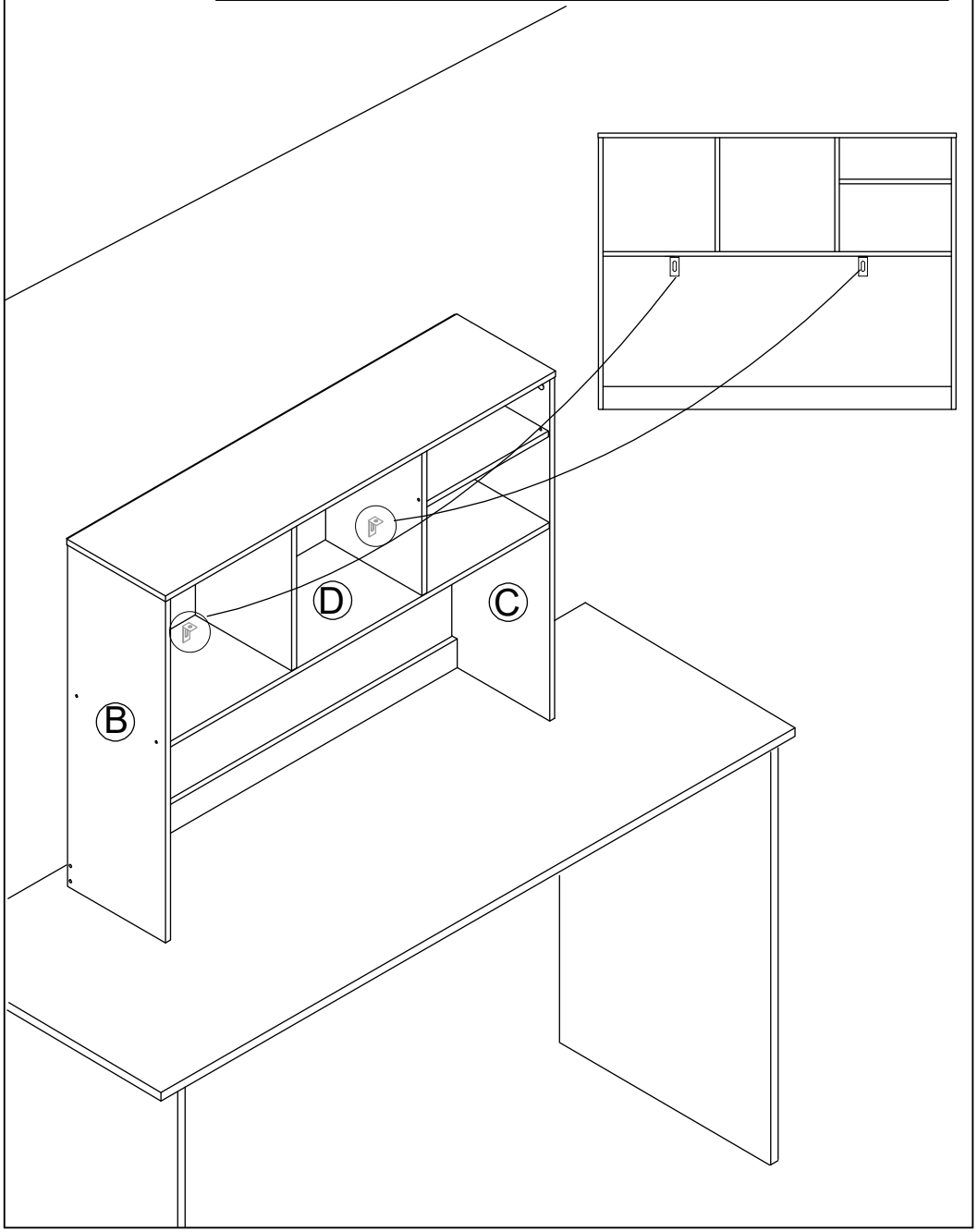

1

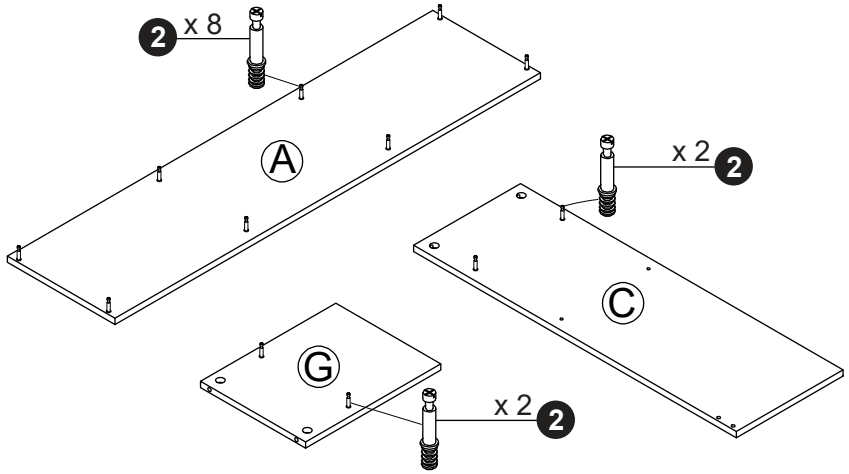

2

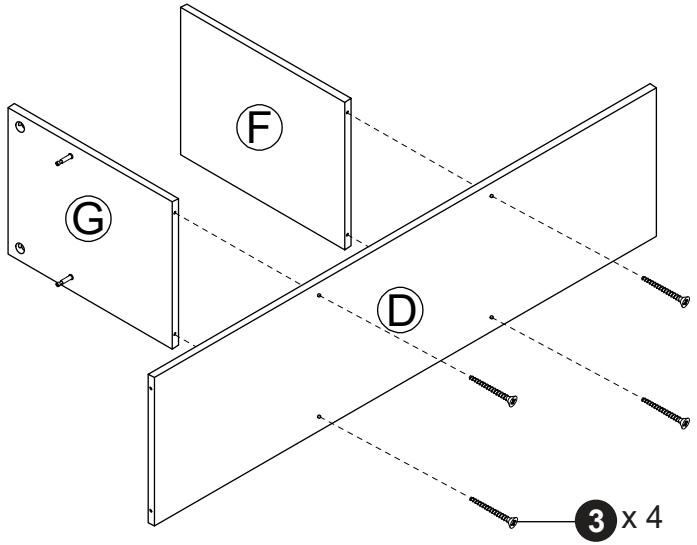

3

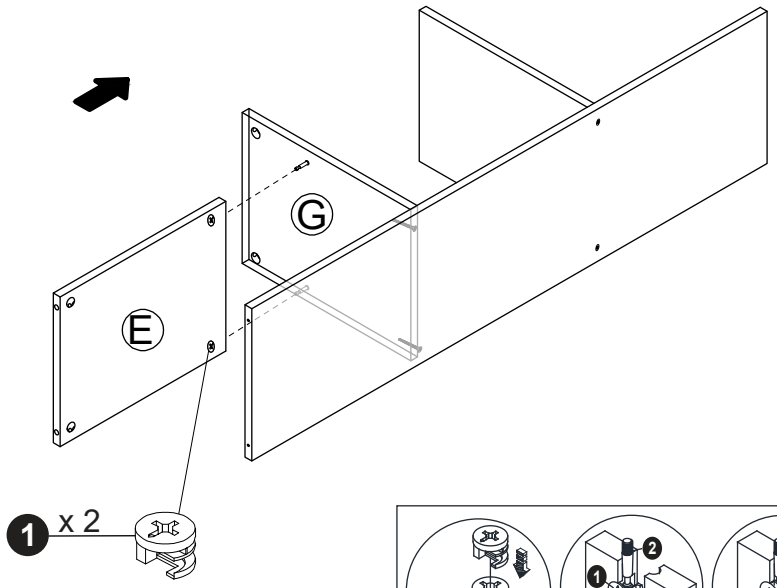

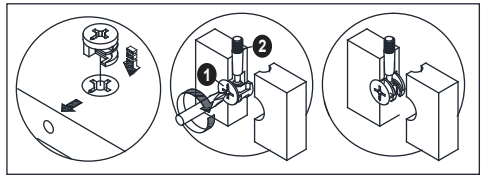

4

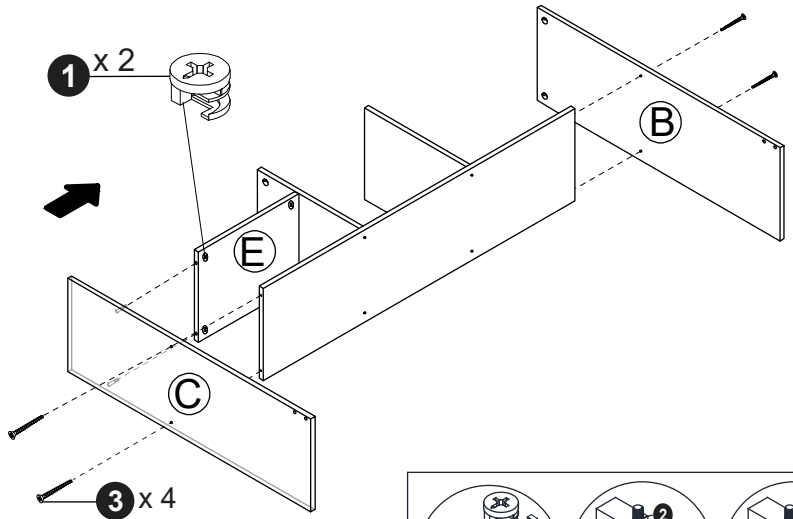

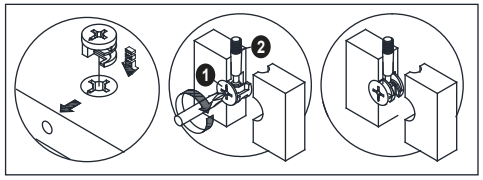

5

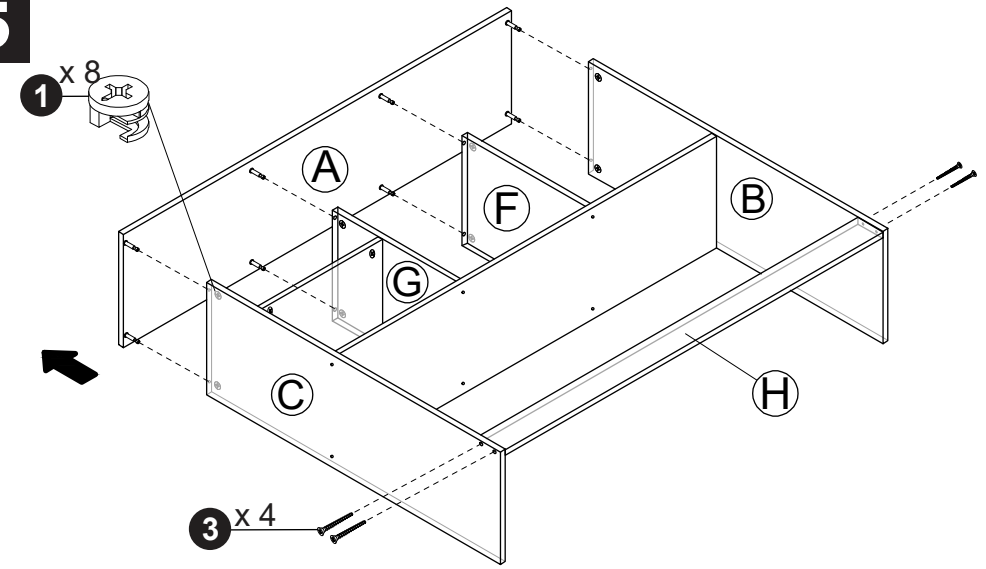

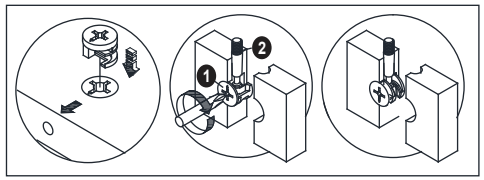

6

