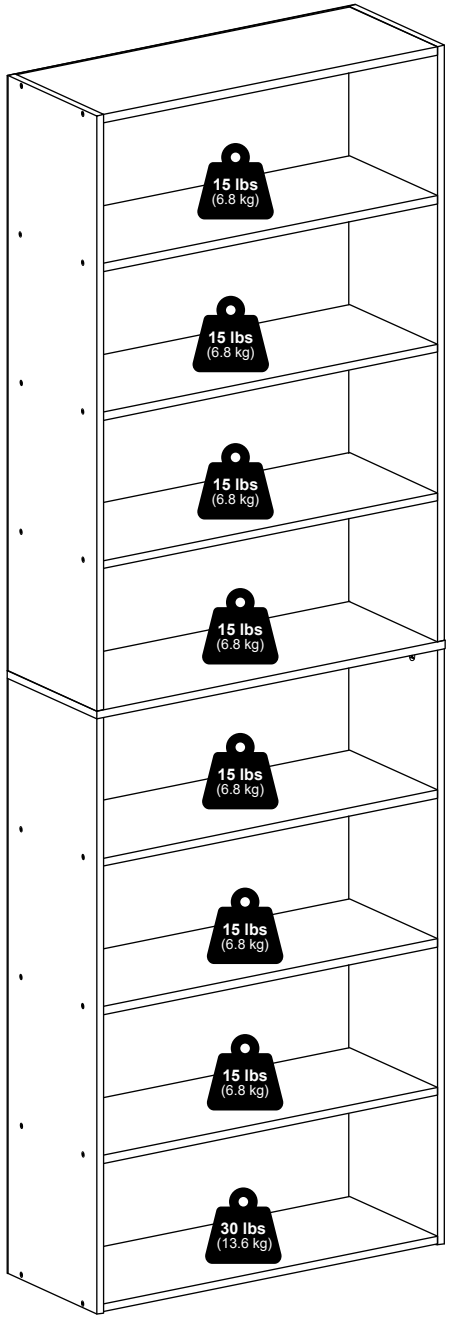

Furinno®

Fits Space, Fits Budget



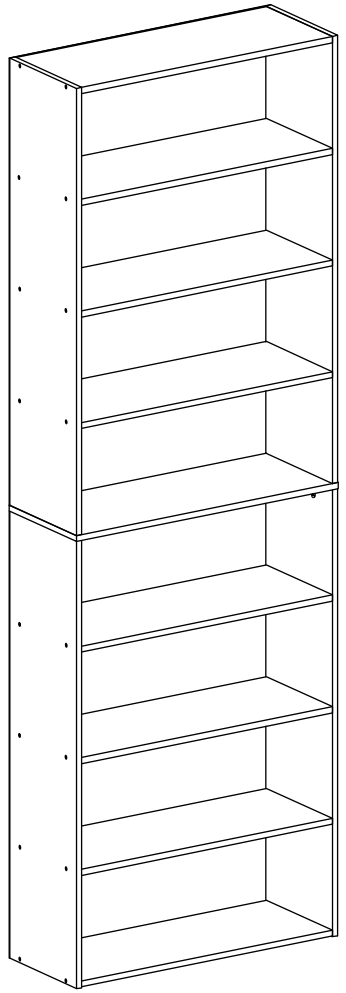

MODEL: 25013

support@furinno.com

www.furinno.com

2501320250423

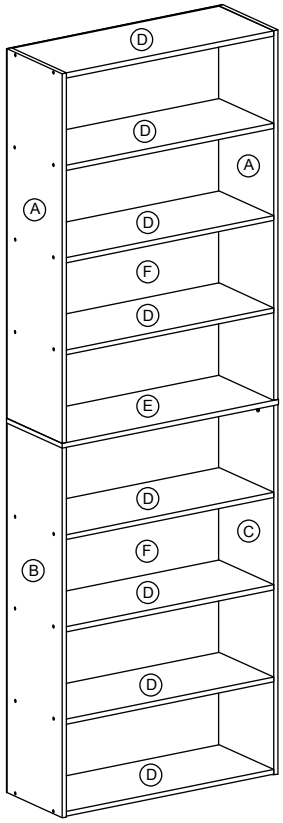

1 x 36  M4 x 32mm	**2** x 43 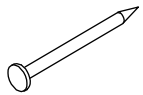 4.0 x 20mm	**3** x 4 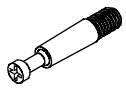 M8 x 24mm
4 x 4  12mm	**5** x 2  5a 16 x 28mm 5b 1/1/4” 5c #8 x 1” 5d M4 x 11mm	**6** x 1 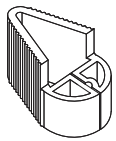

8

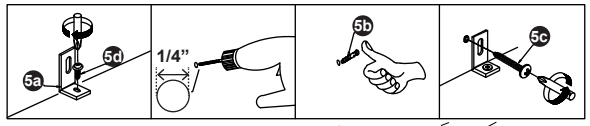

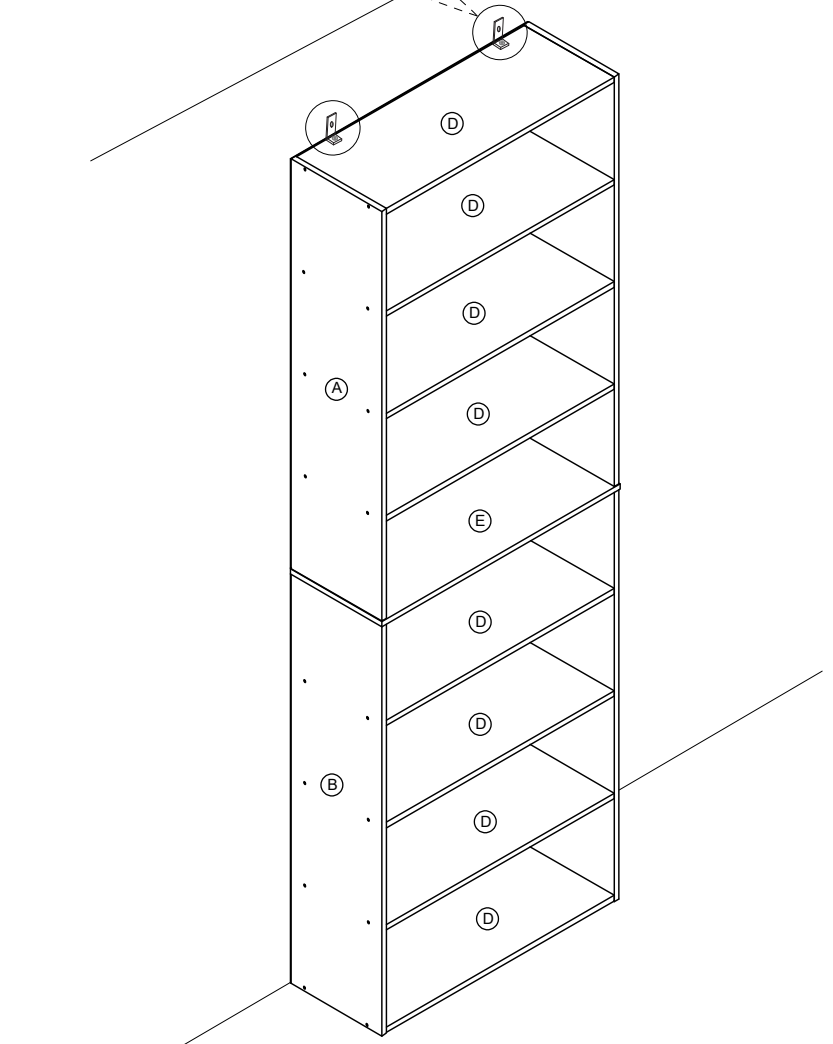

6

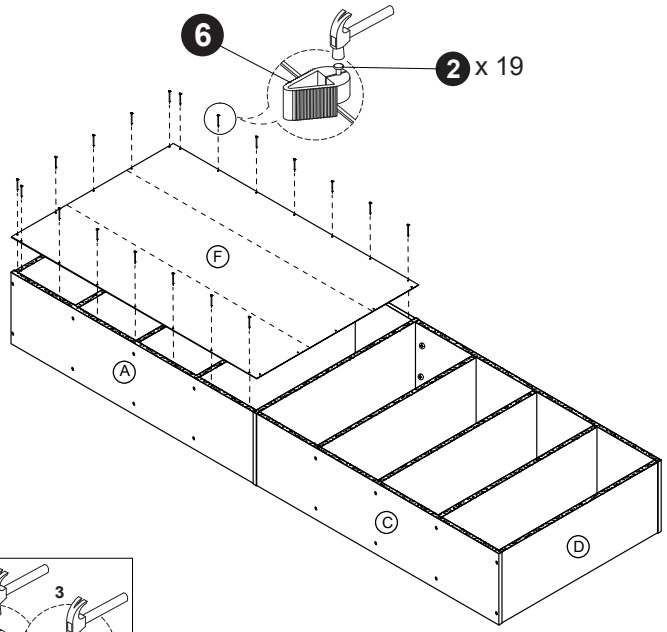

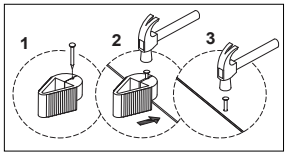

7

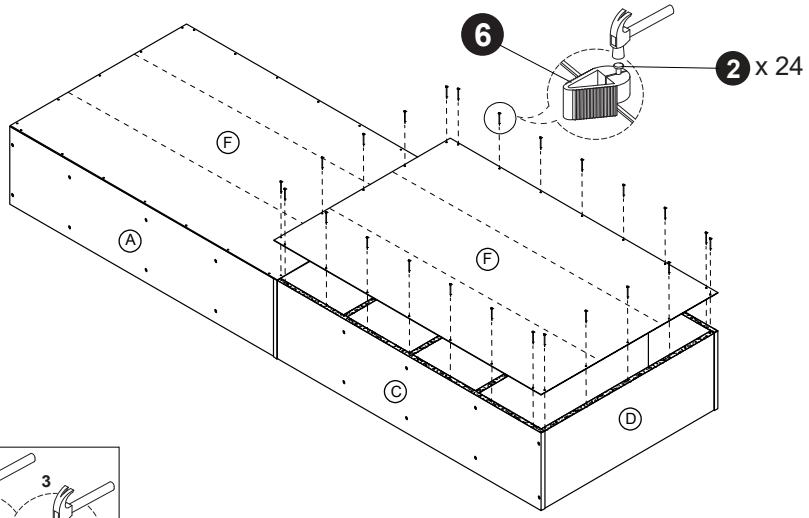

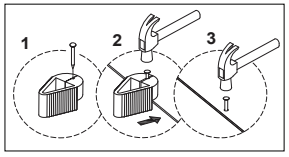

1

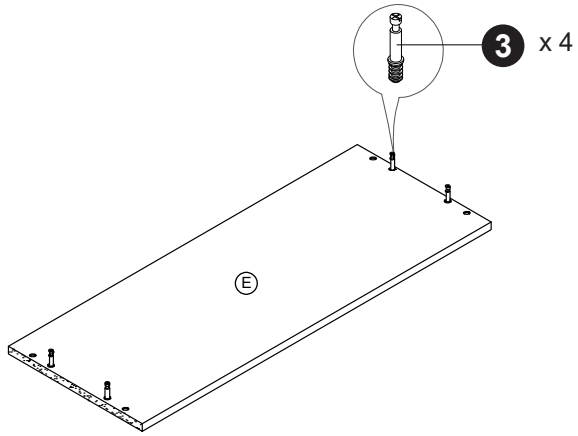

2

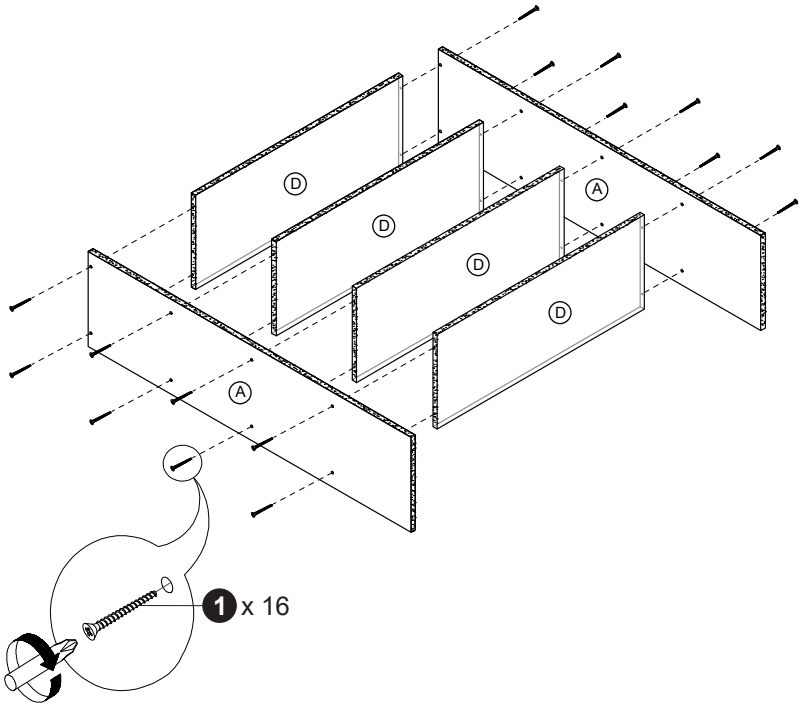

3

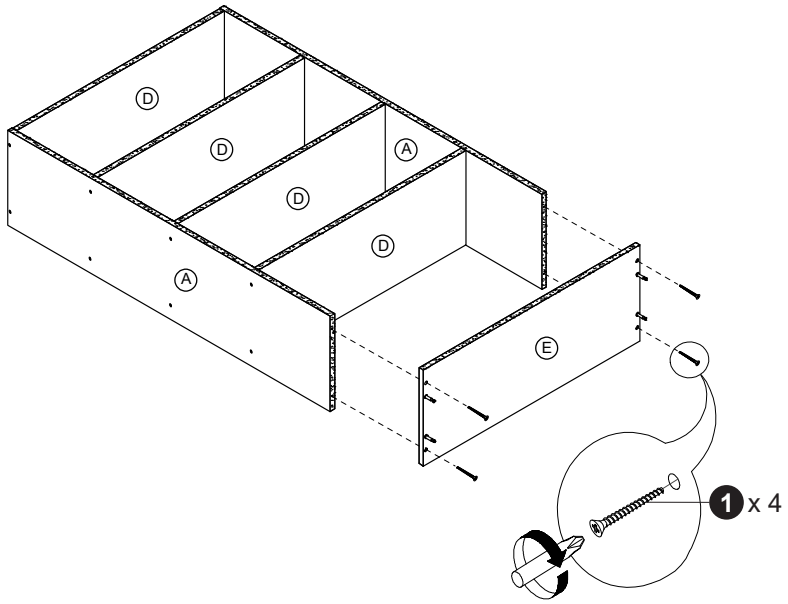

4

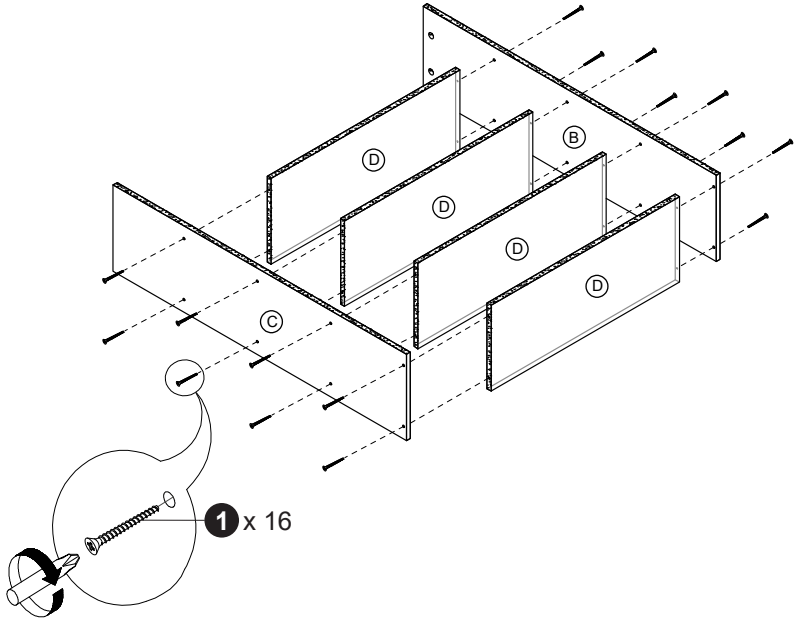

5

