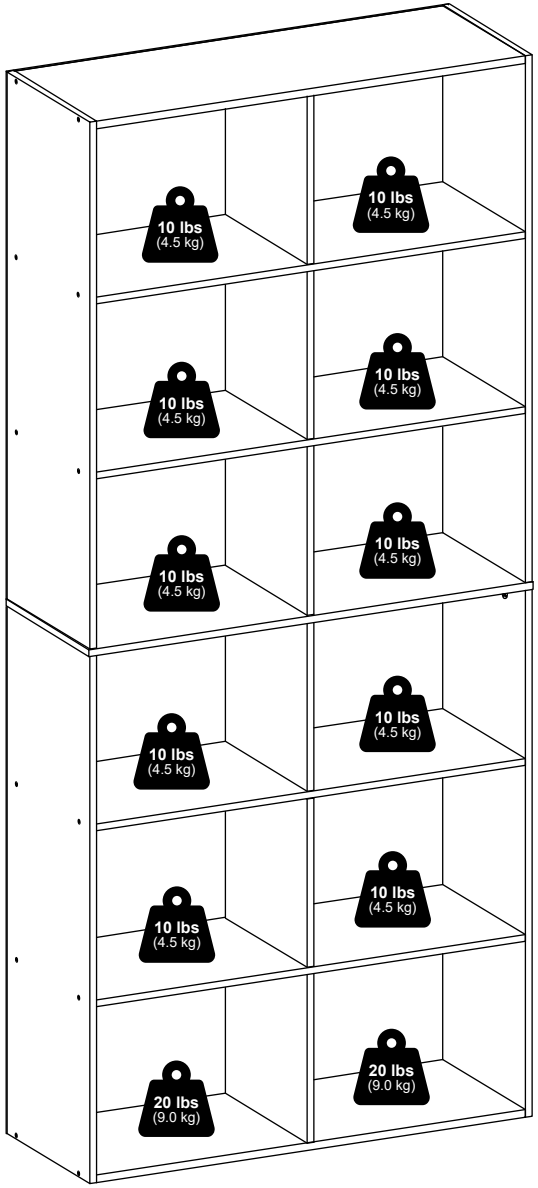

Furinno®

Fits Space, Fits Budget





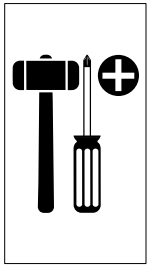

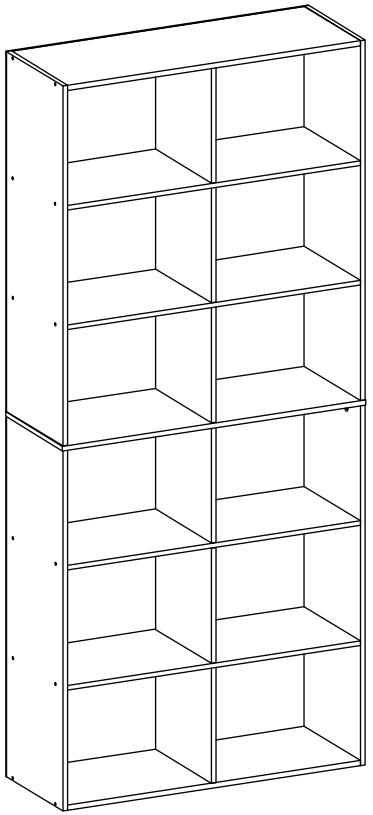

MODEL: 25014

support@furinno.com

www.furinno.com

2501420250423

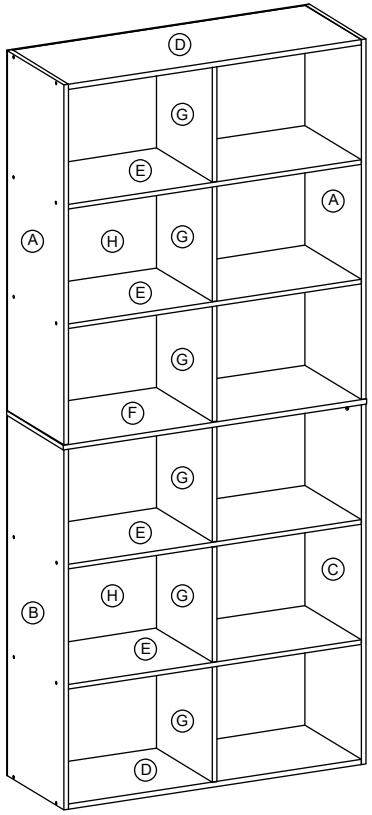

1 x 28  M4 x 32mm	**2** x 43 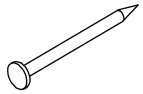 4.0 x 20mm	**3** x 4  12mm	**4** x 4 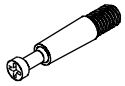 M8 x 24mm
5 x 2  5a 16 x 28mm  5b 1/1/4”  5c #8 x 1”  5d M4 x 11mm	**6** x 4 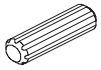 M5 x 30mm	**7** x 10 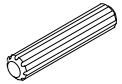 M5 x 50mm	**8** x 1 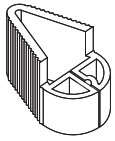

9

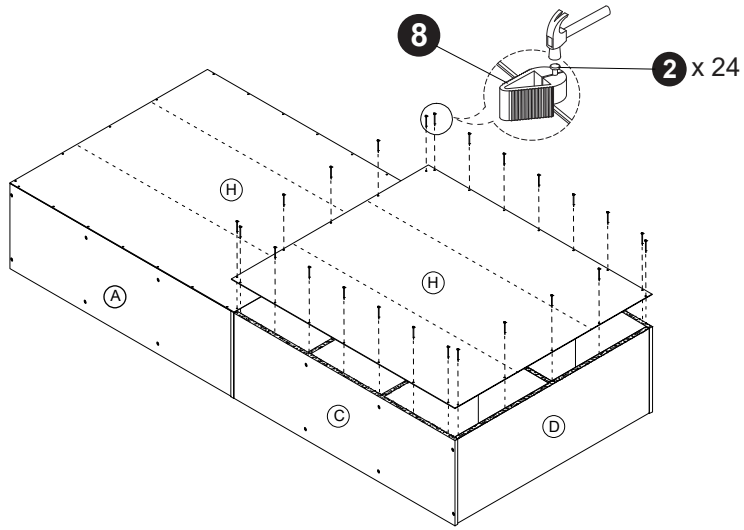

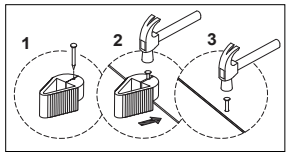

10

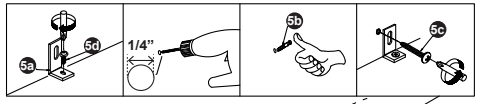

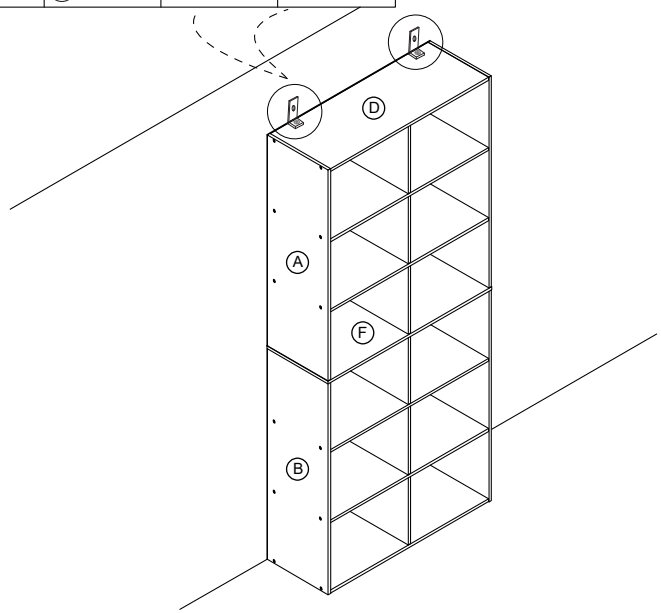

7

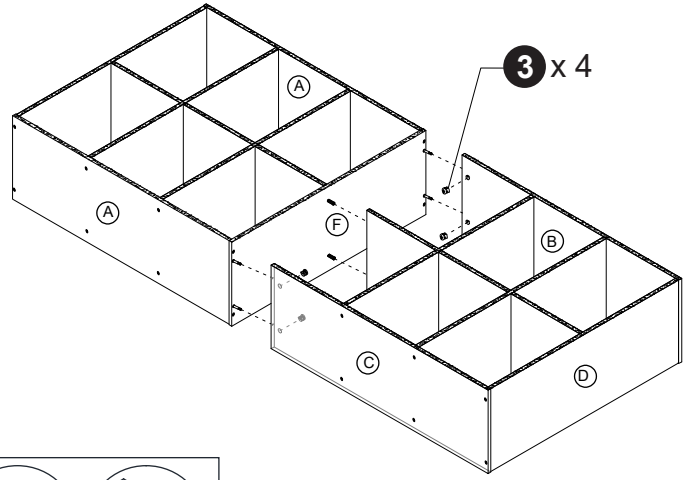

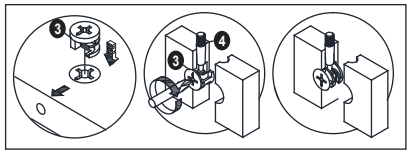

8

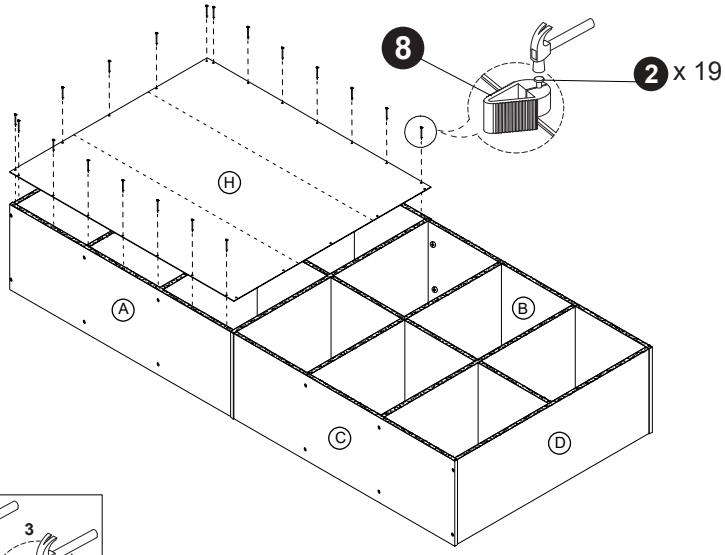

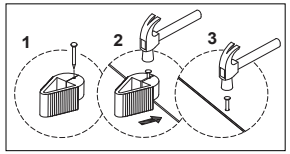

1

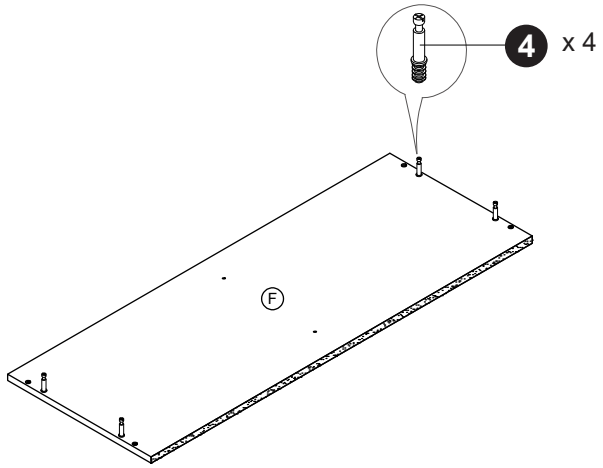

2

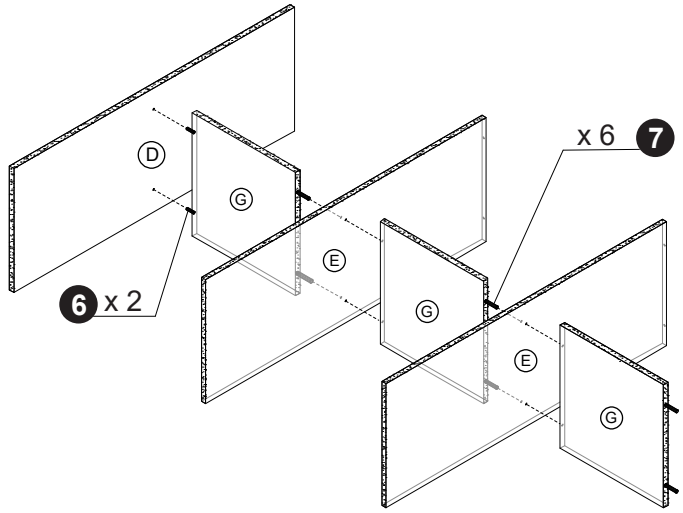

3

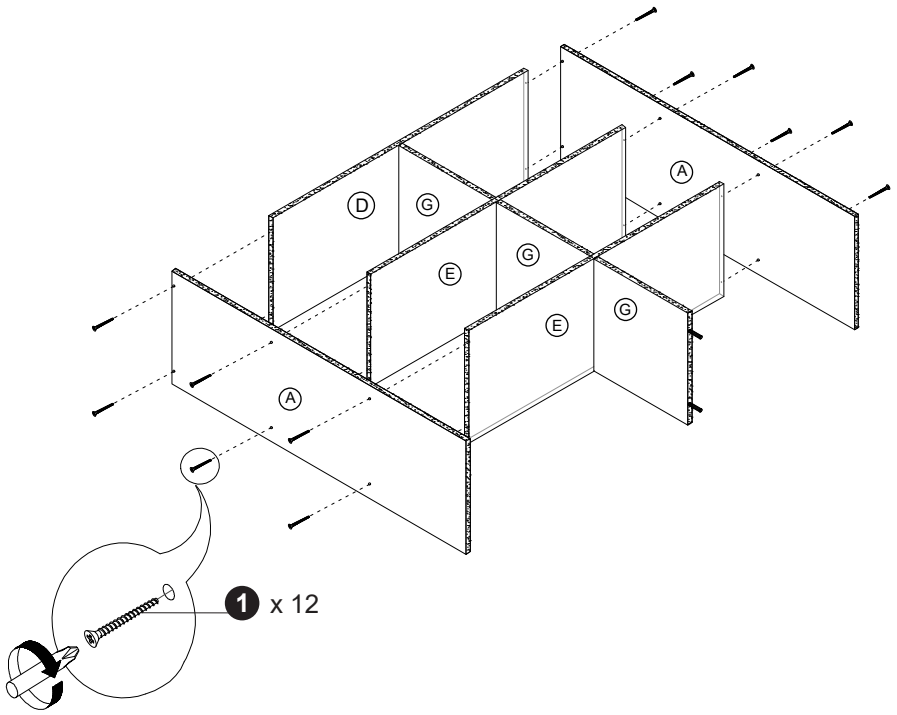

4

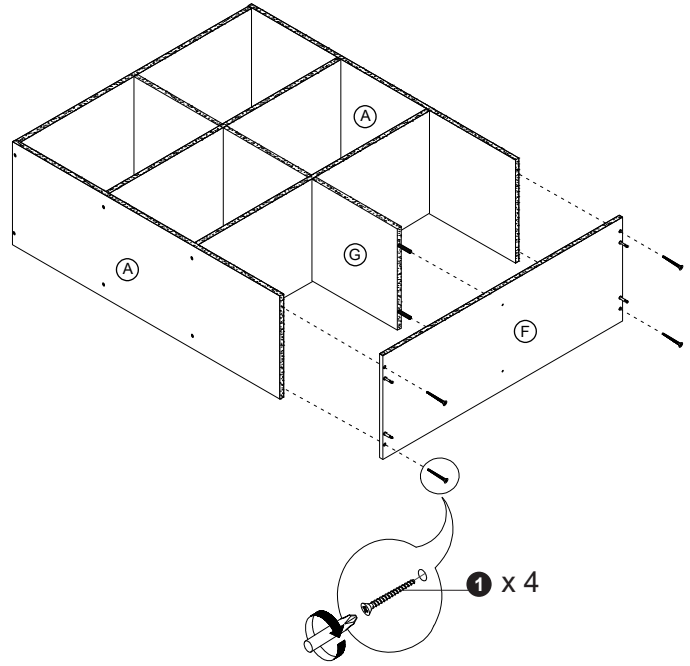

5

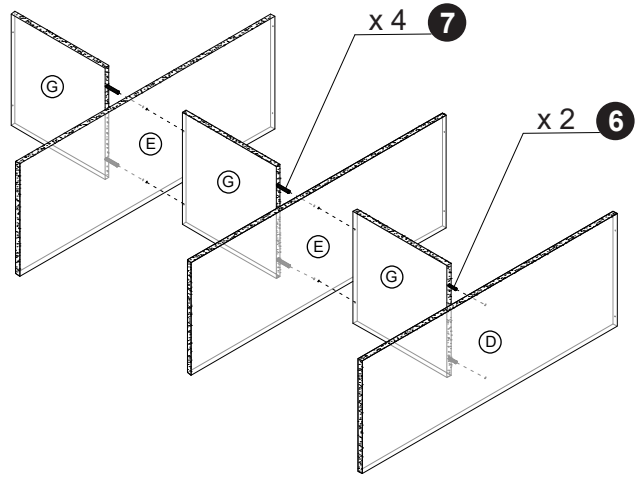

6

