10

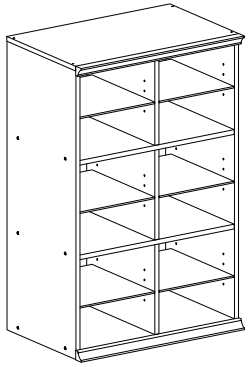

x 2

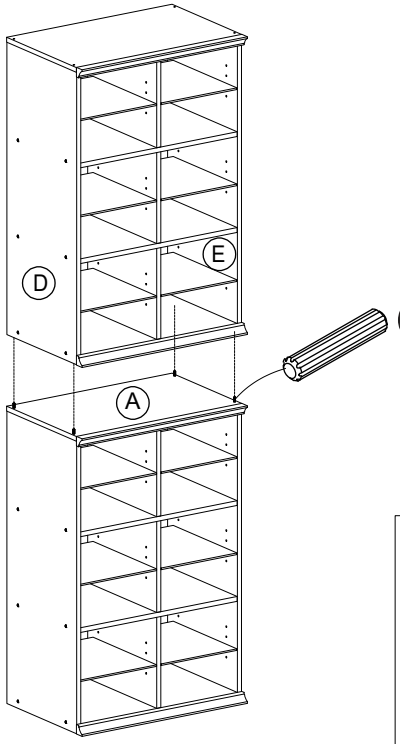



11

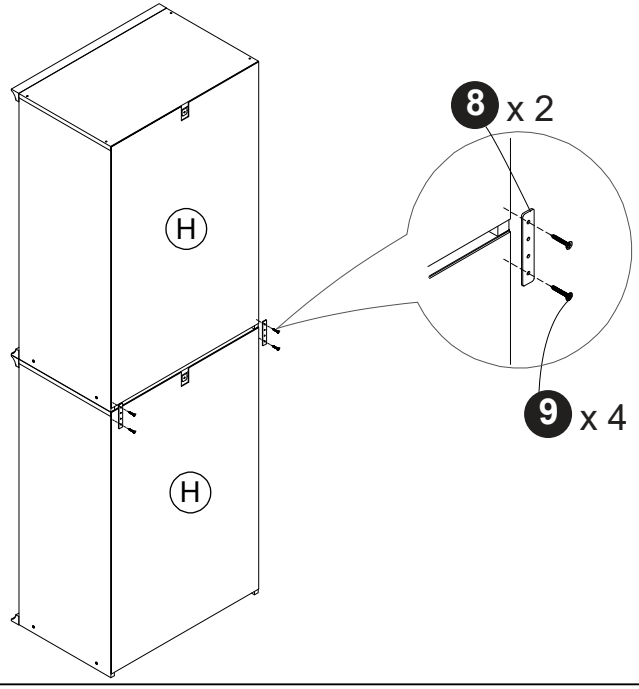





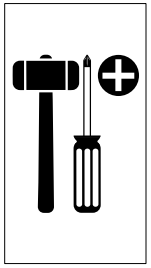

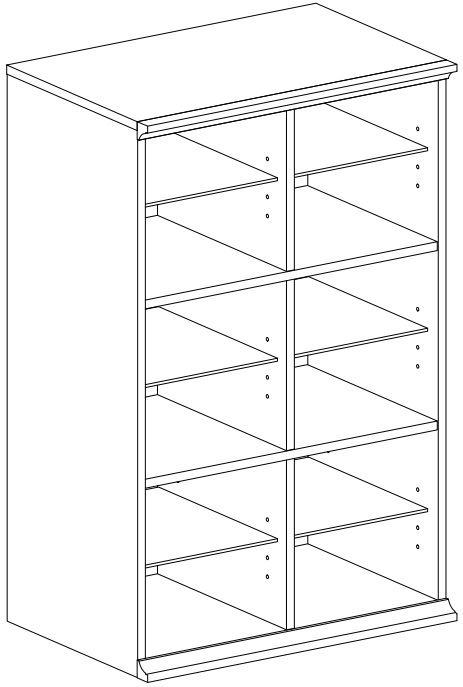

MODEL: 25034

2503420251222

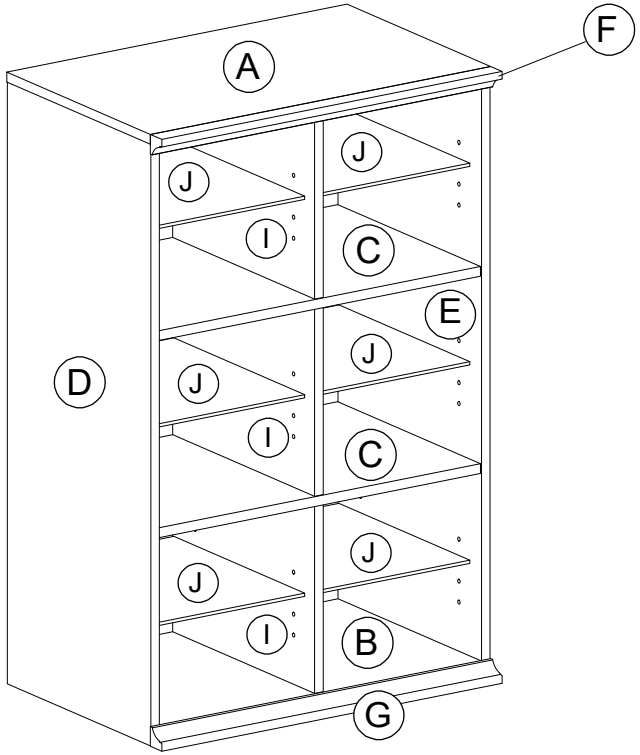

1 x 8 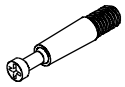	2 x 8 	3 x 12  M4 x 38mm	4 x 28 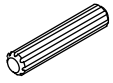 M5 x 30mm
5 x 24 	6 x 1 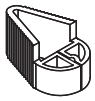	7 x 30 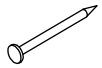	8 x 2 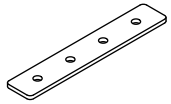
9 x 4  M4 x 25mm	10 x 1 	11 x 1 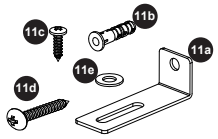	12 x 4 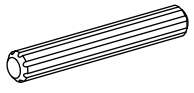 M5 x 50mm

8

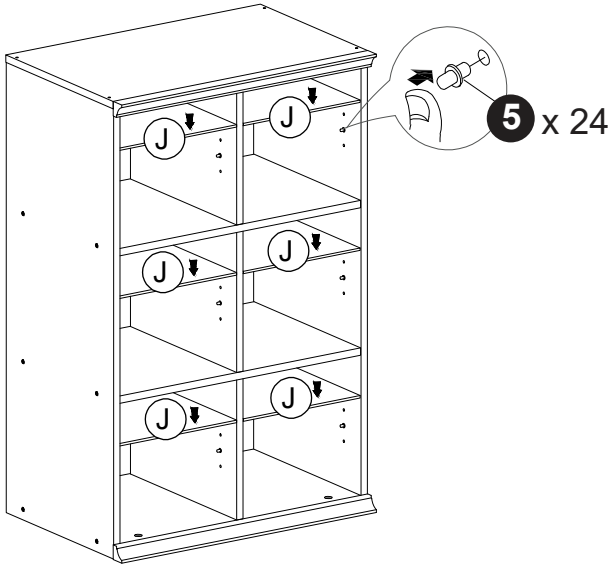

9

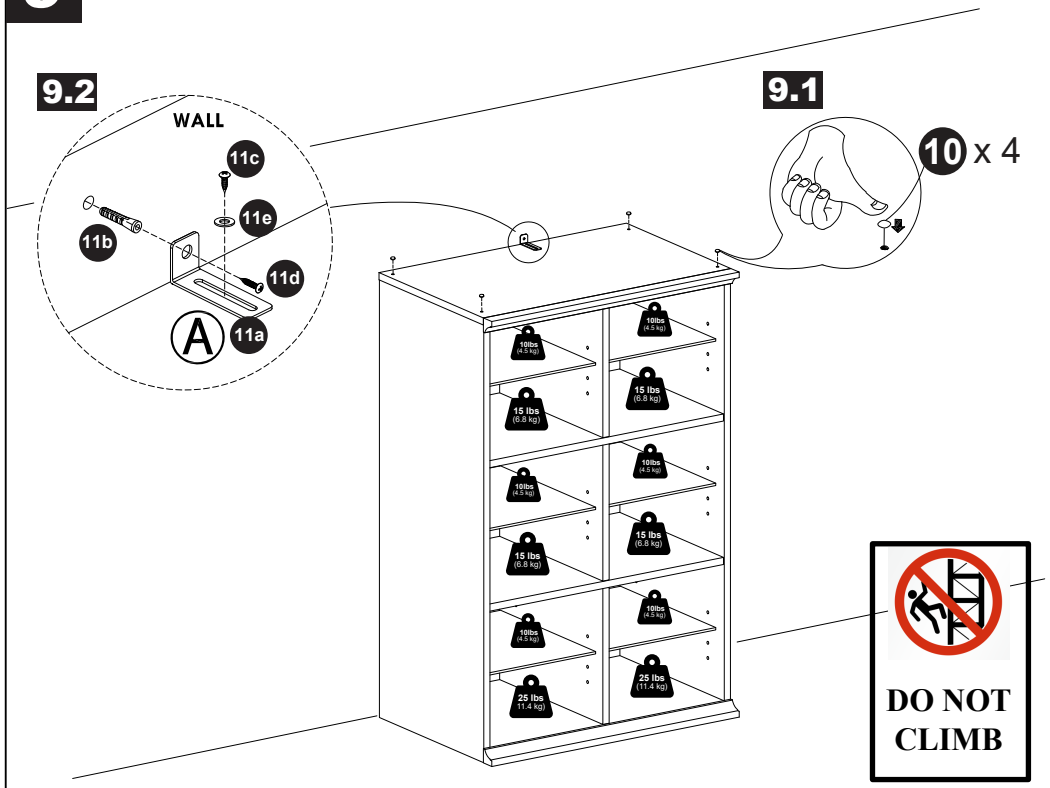

6

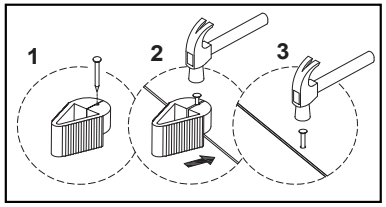

7

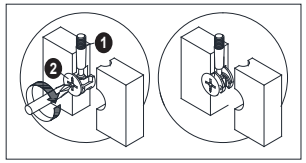

1

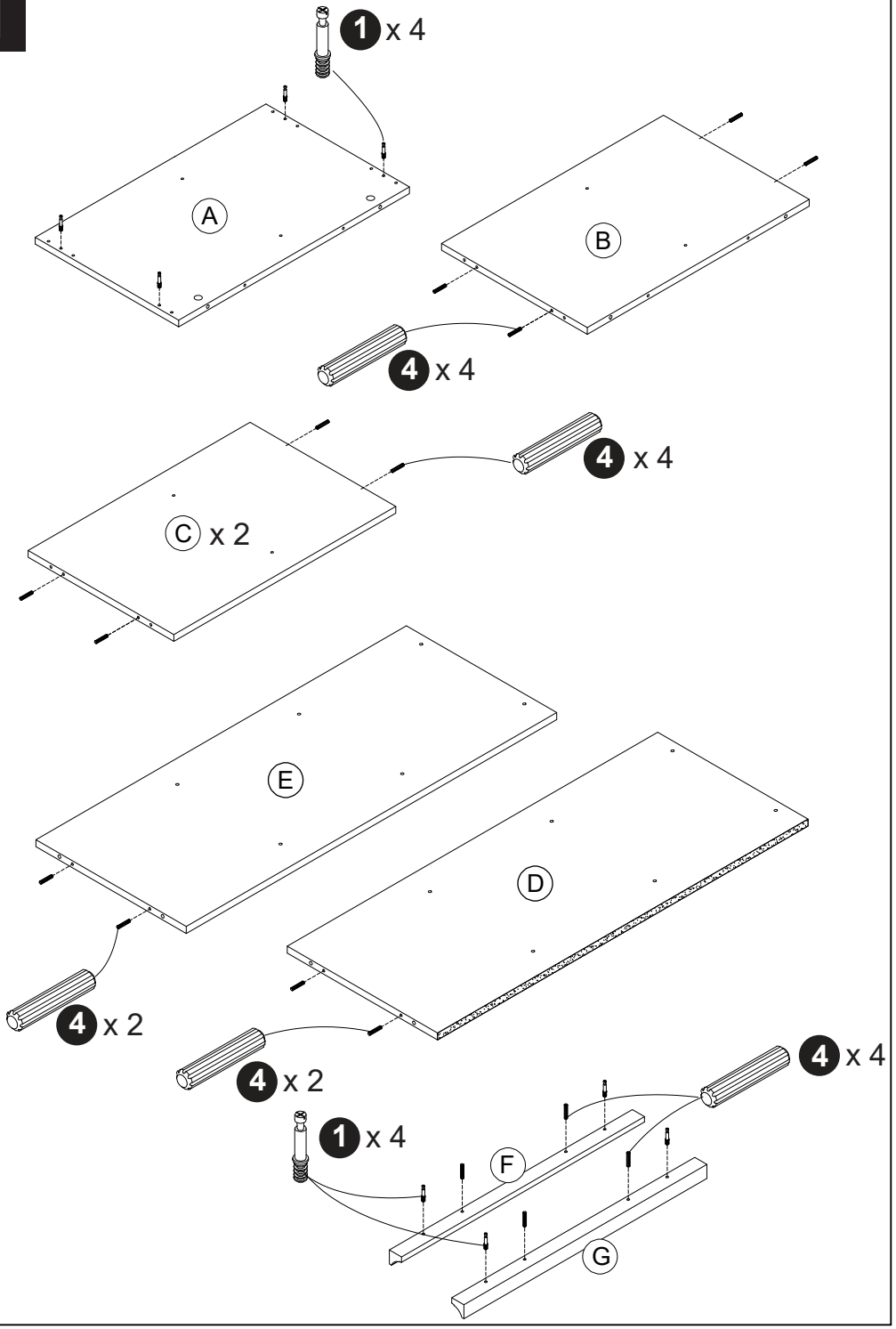

2

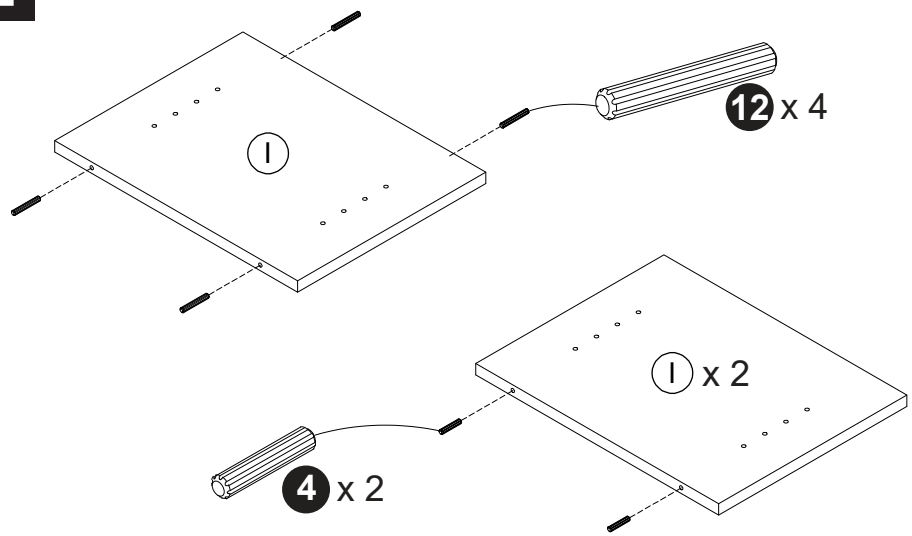

3

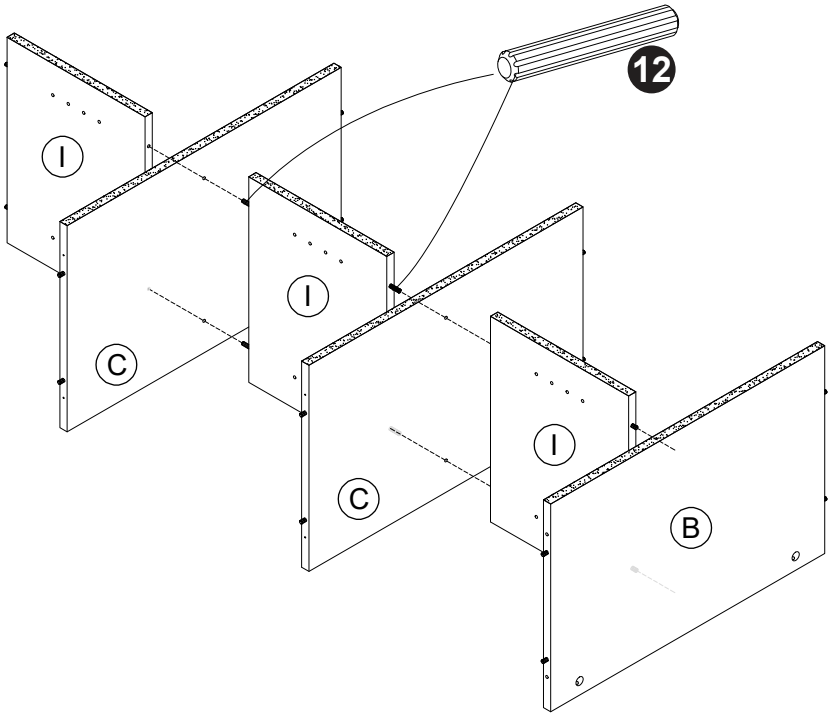

4

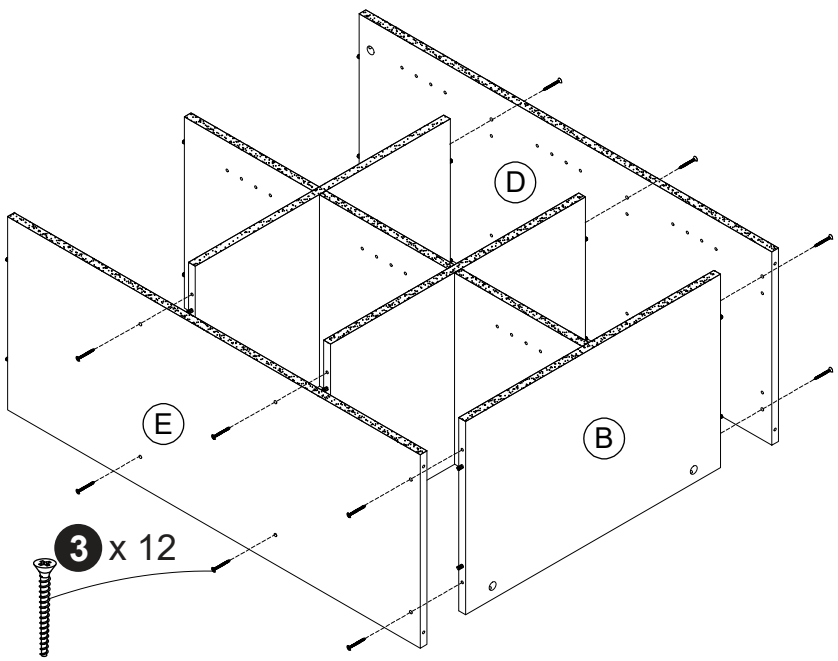

5

