

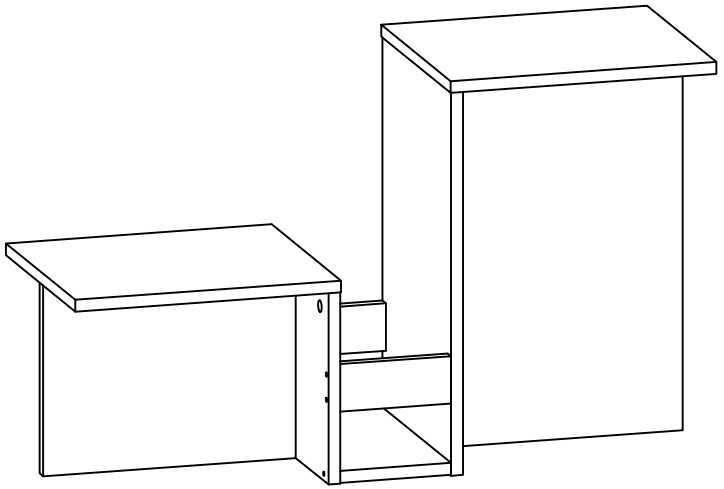

**MODEL: 25176**



2517620250721

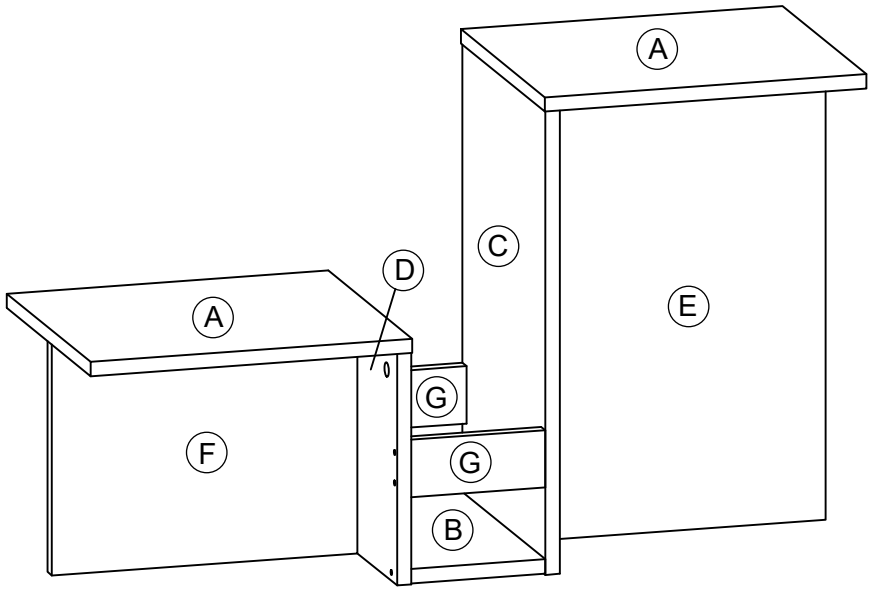


| 1 | 2 | 3 | 4 |
|---|---|---|---|
| x 13 | x 13 | x 2 | x 14 |
| 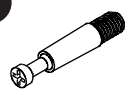 |  | 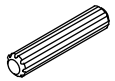 |  |
| M8 x 24mm | 15mm | M5 x 30mm | M4 x 38mm |



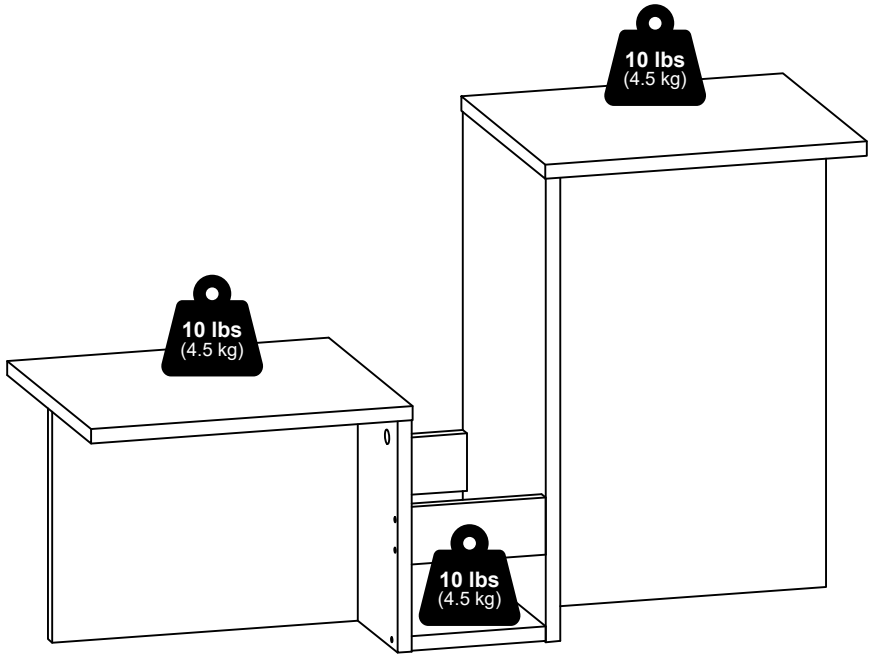

# 5

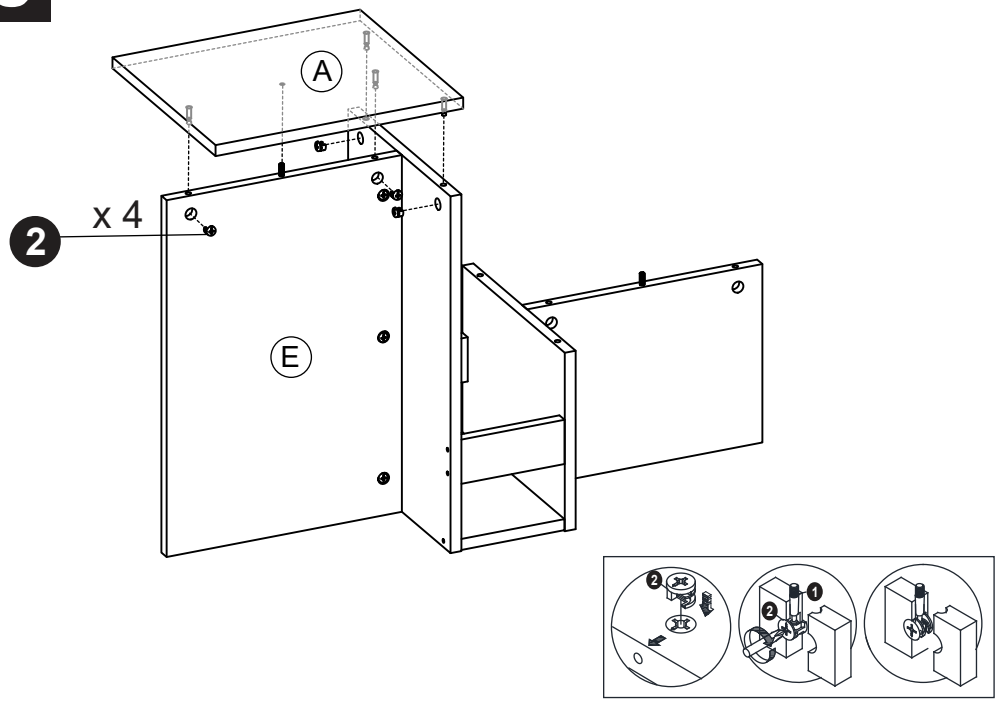


# 6

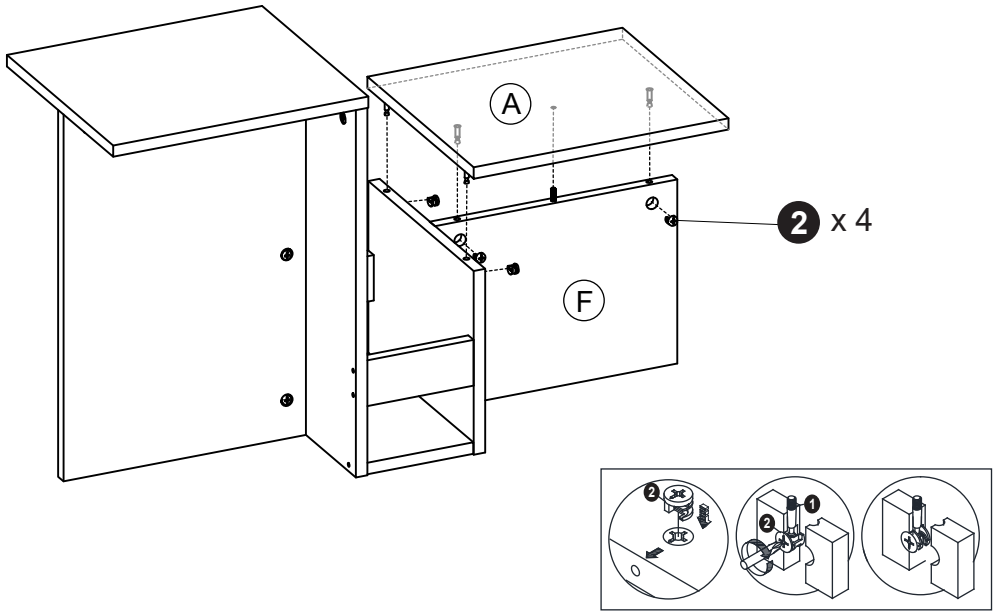




# 1

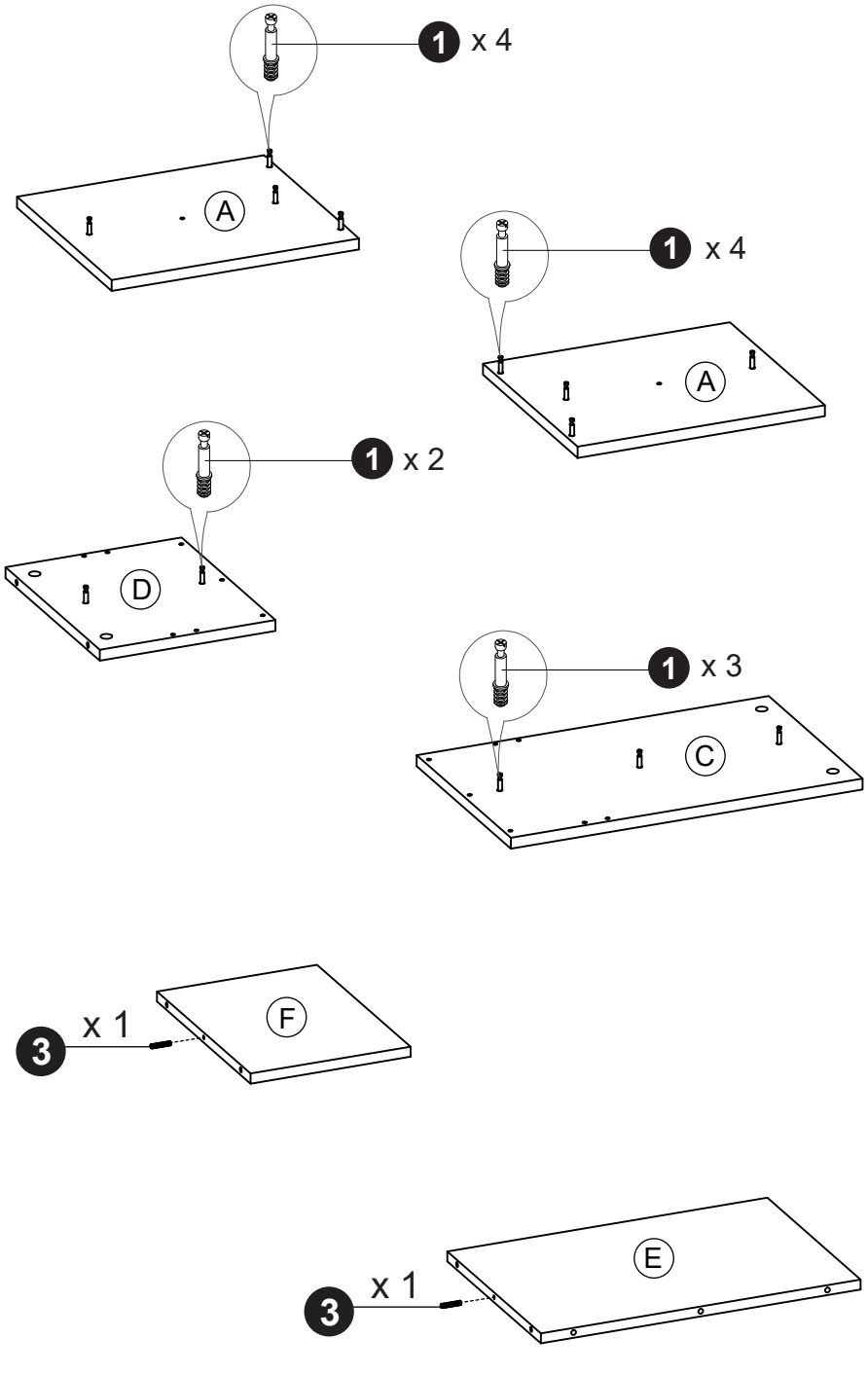

## 2

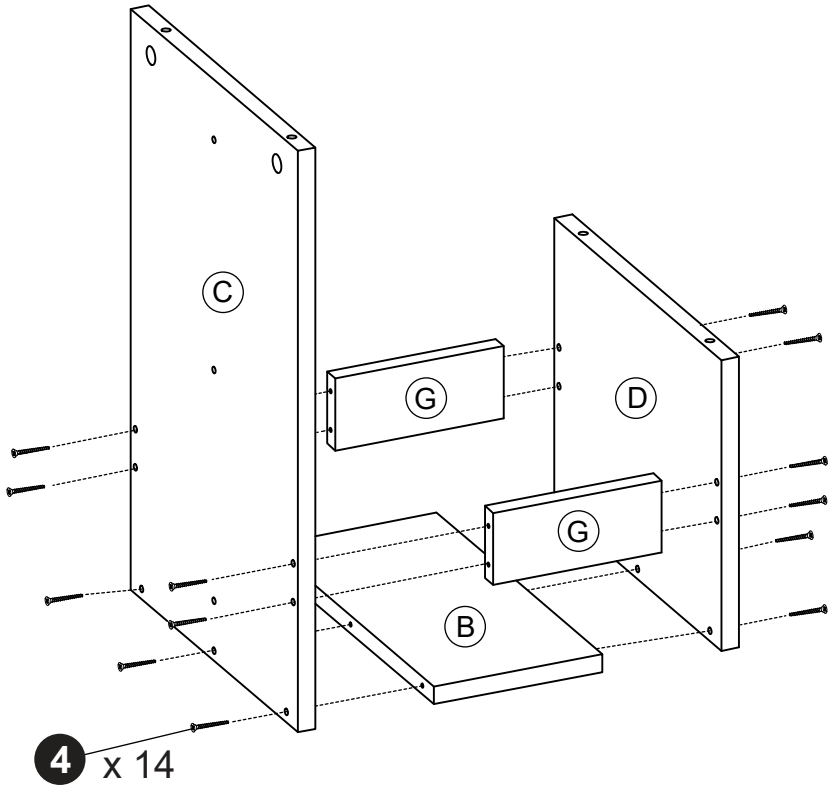




## 3

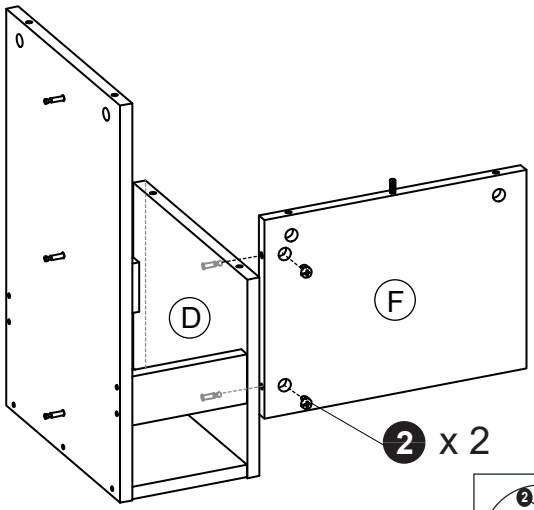


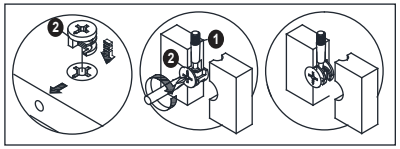

## 4

