3

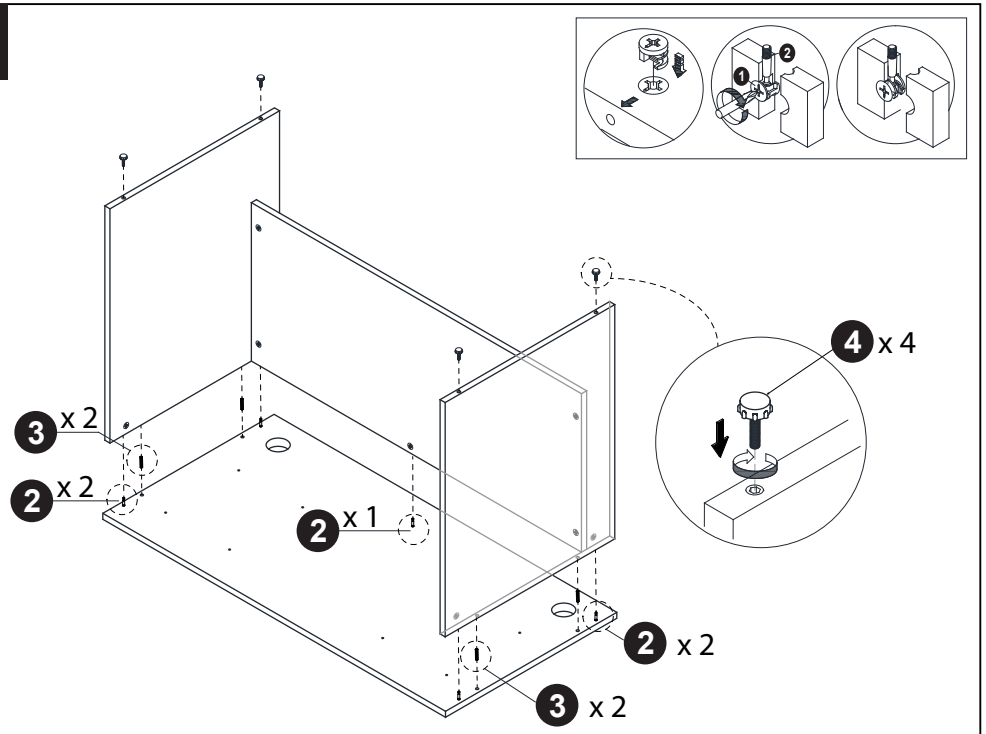

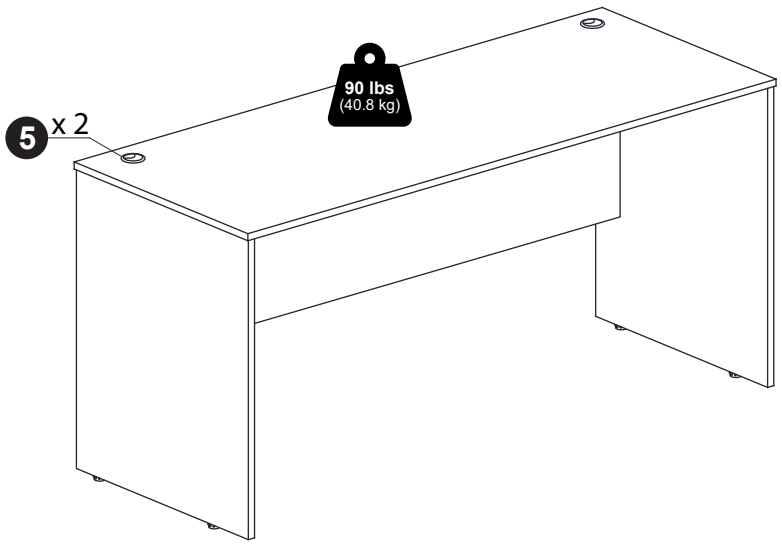

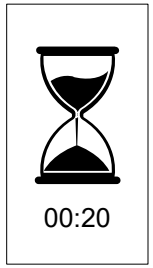



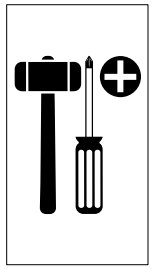

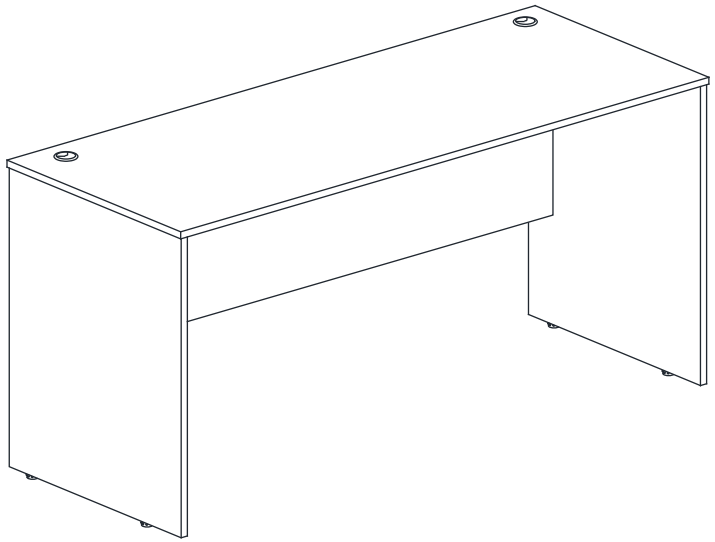

MODEL: 25221

2522120250620

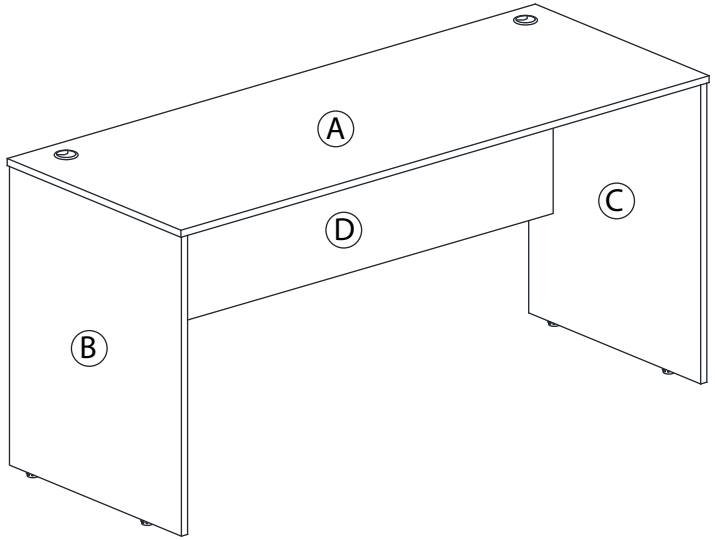

1 x 9  15mm	2 x 9 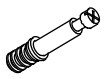 M6 x 31mm	3 x 8 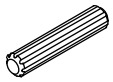 M8 x 30mm
4 x 4 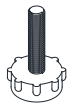 M6 x 16 x 26mm	5 x 2  60mm	

1

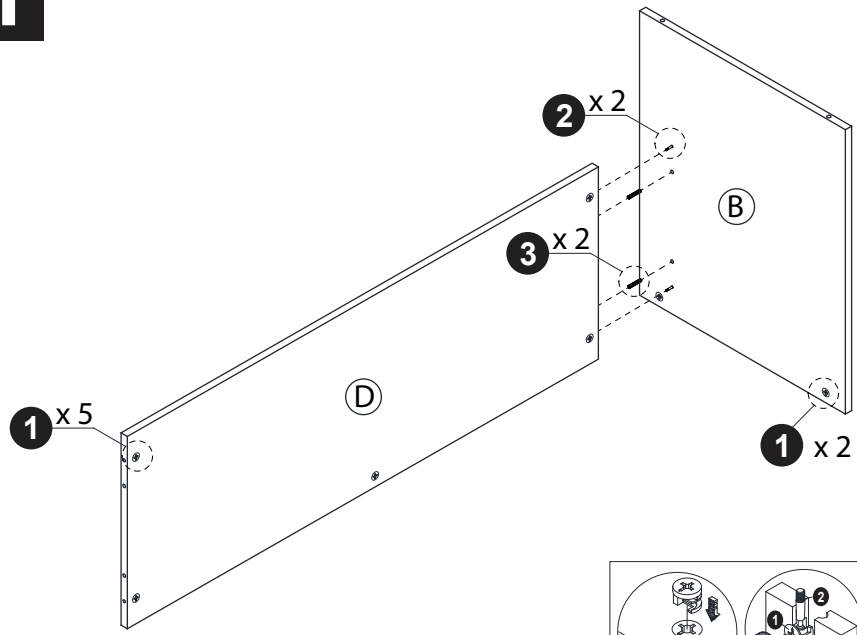

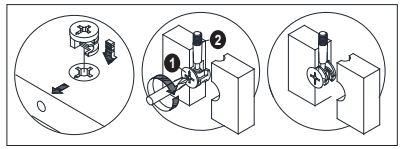

2

