12

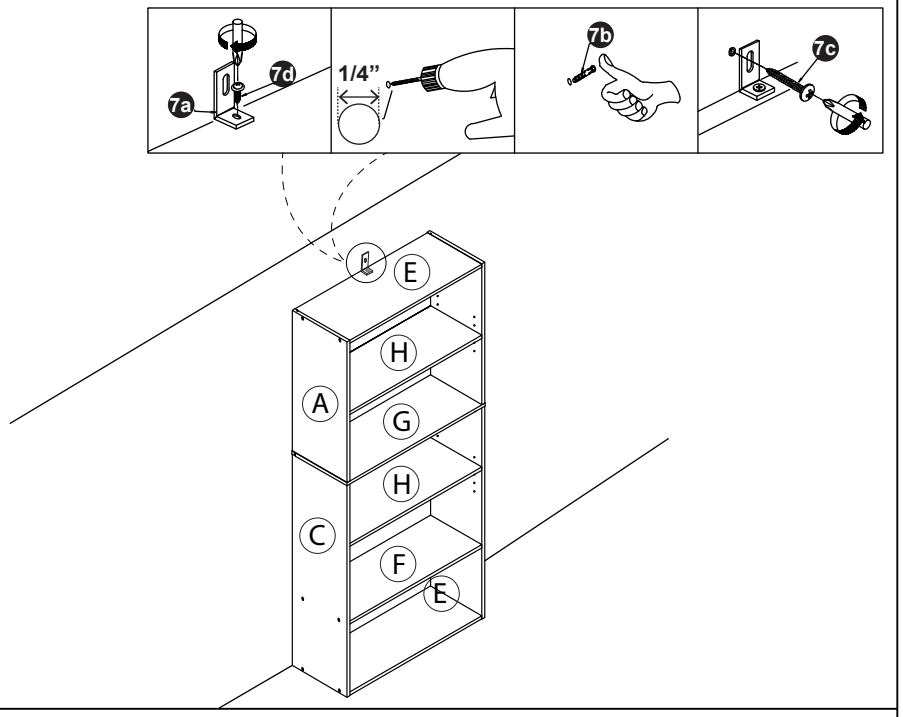

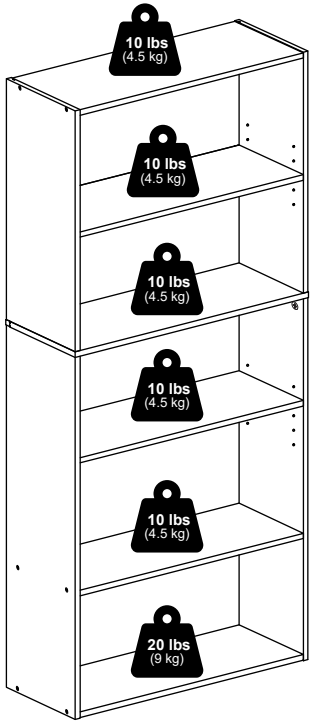





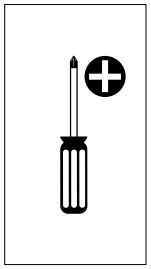

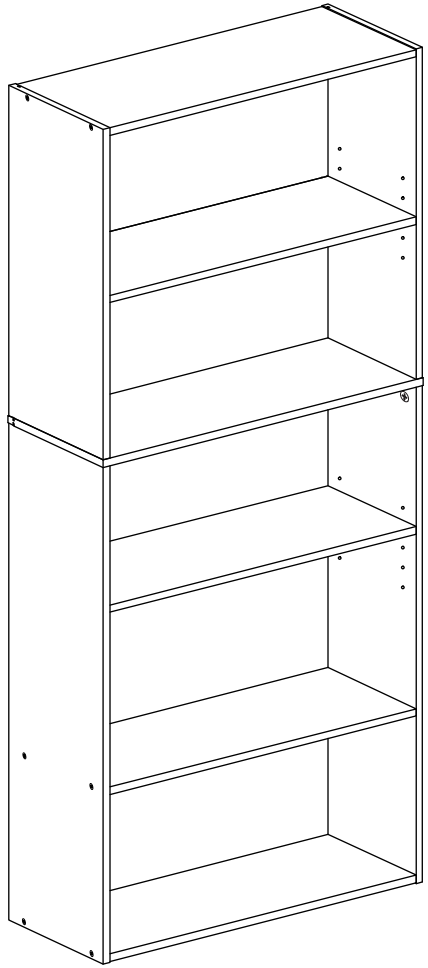

MODEL: 25233

2523320250709

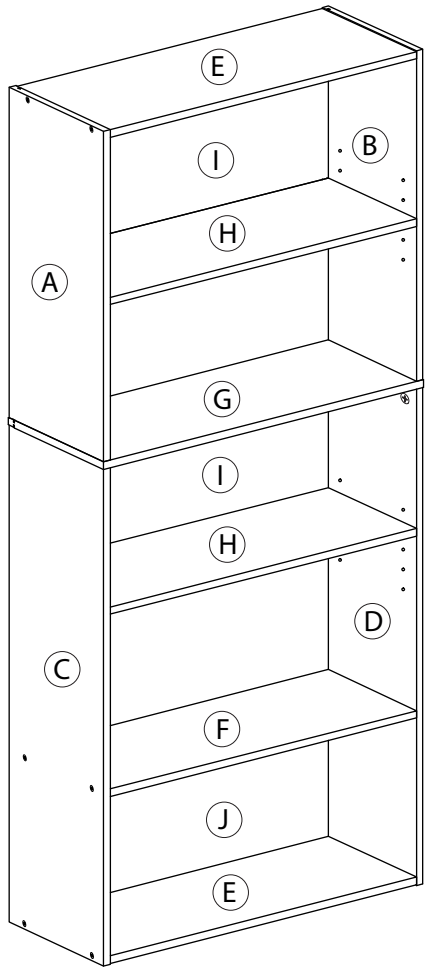

1 x 4 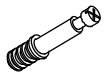 M8 x 24mm	**2** x 4  9.5/15mm	**3** x 16  M4 x 38mm	**4** x 8  5 x 6 x 16mm
5 x 8 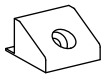 M5 x 20mm	**6** x 8  M3.5 x 12mm	**7** x 1  7a 16 x 28mm 7b 1 1/4" 7c #8 x 1" 7d 4 x 11mm	

10

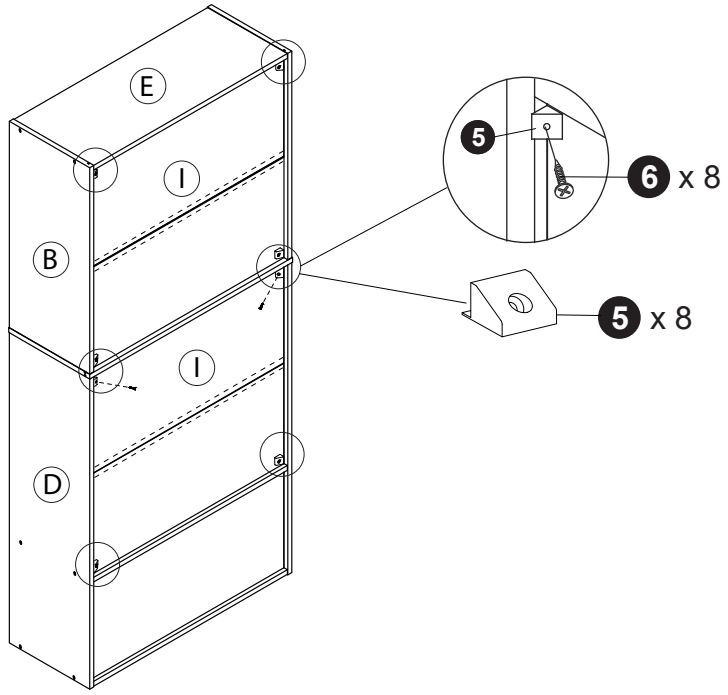

11

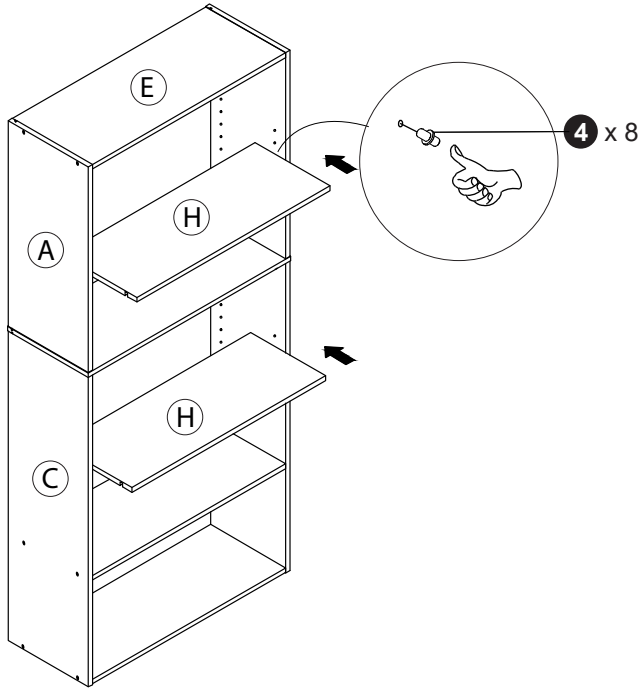

8

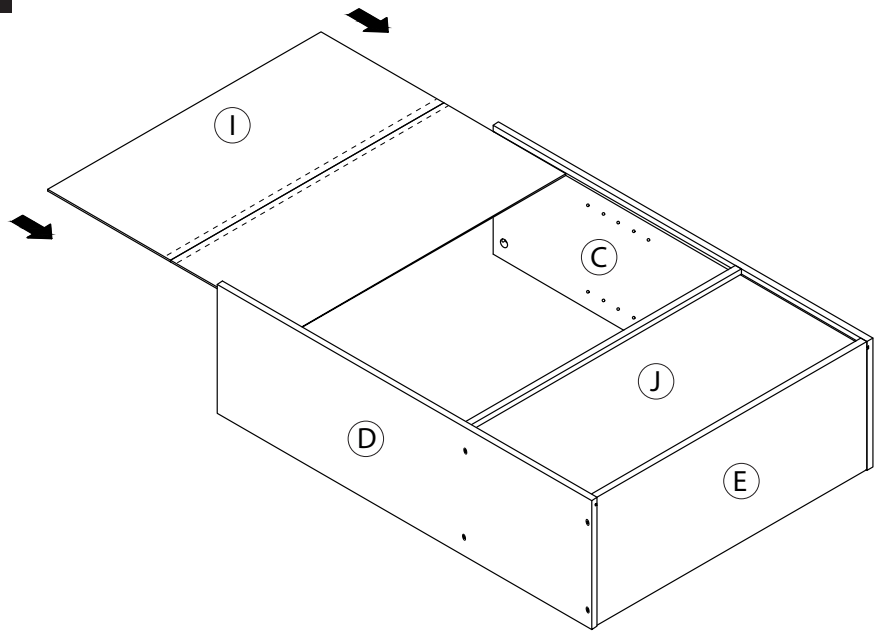

9

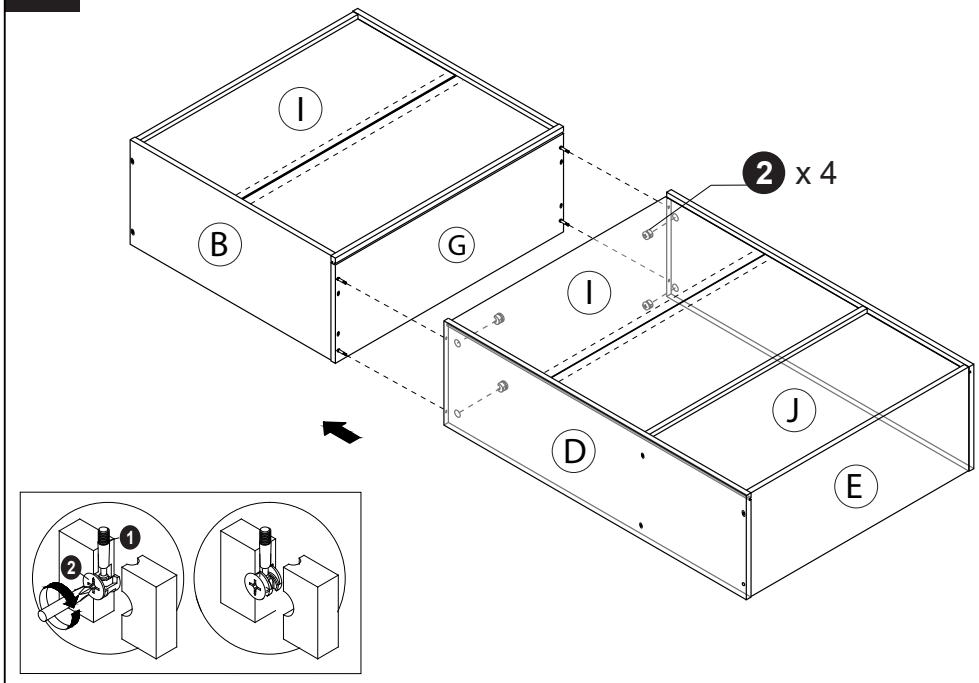

1

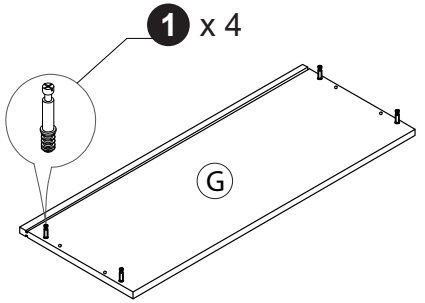

2

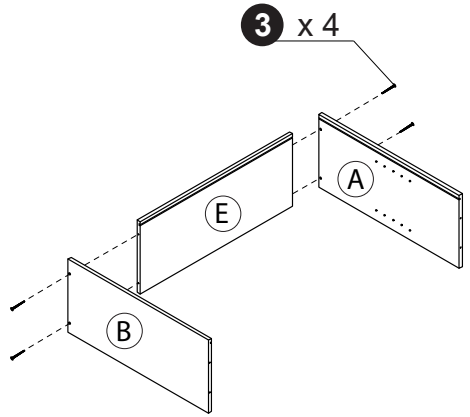

3

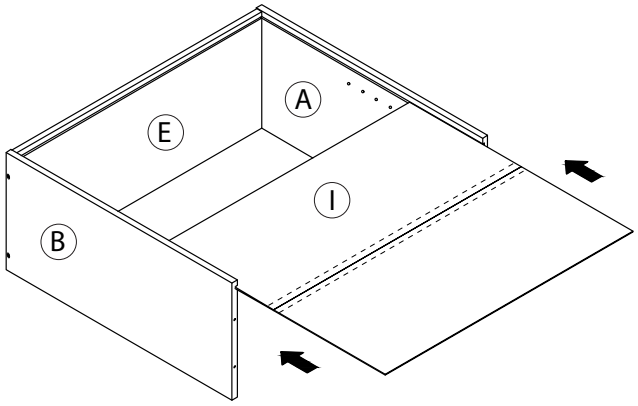

4

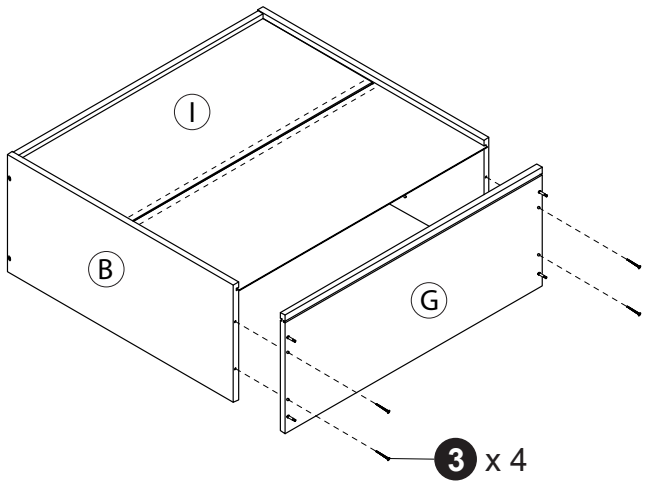

5

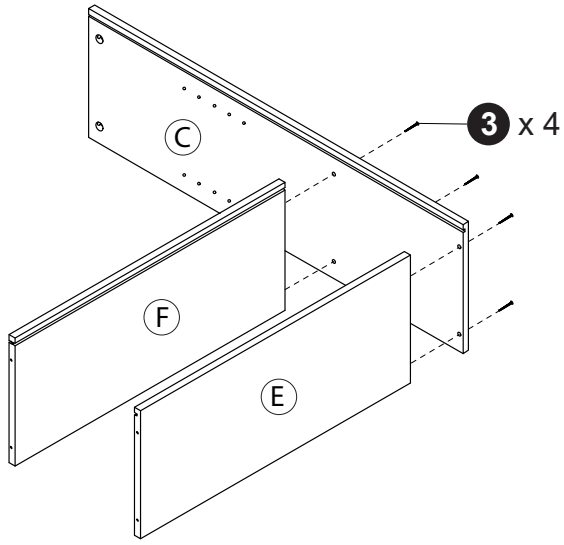

6

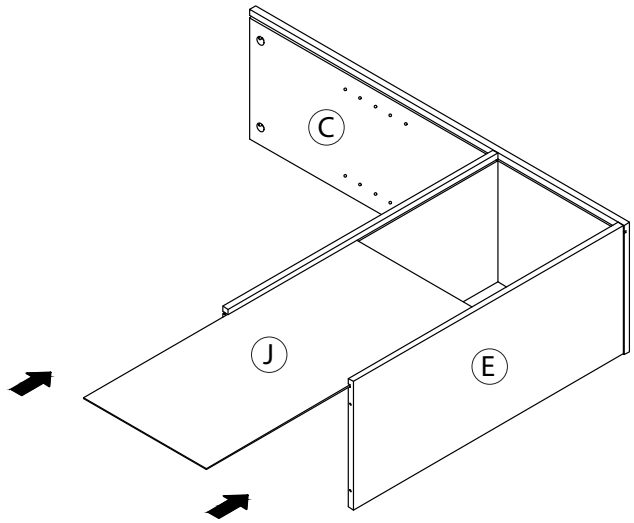

7

