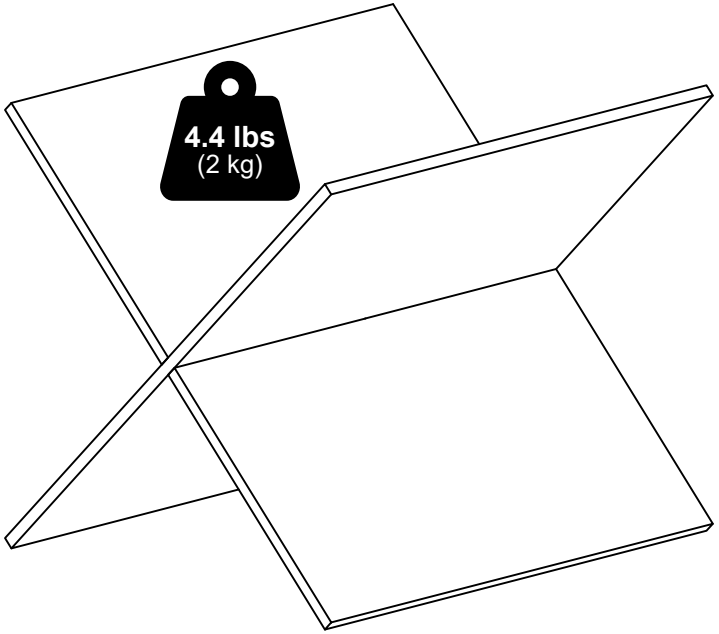





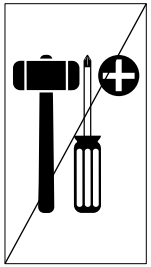

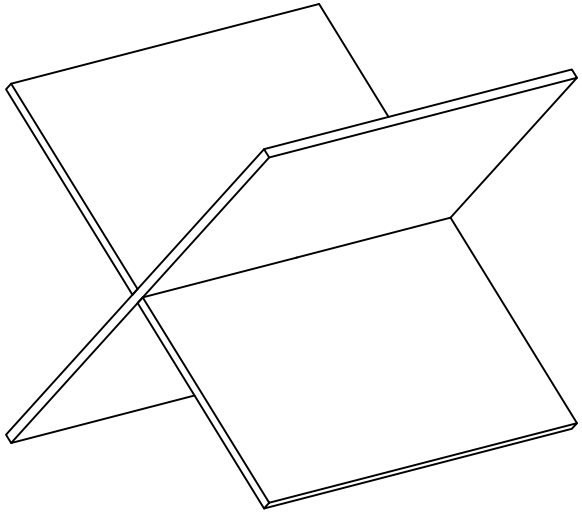

MODEL: 25325

2532520250827

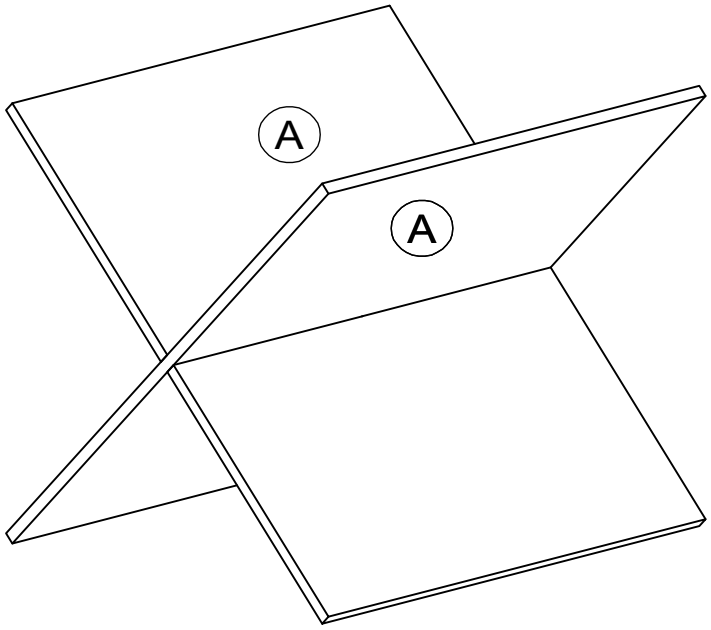

1

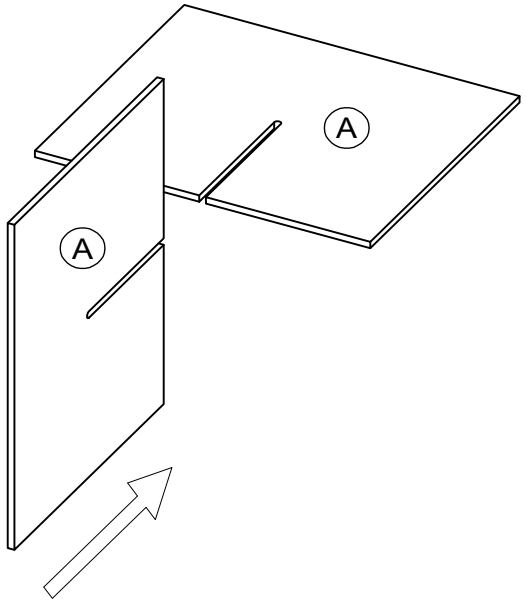

2

