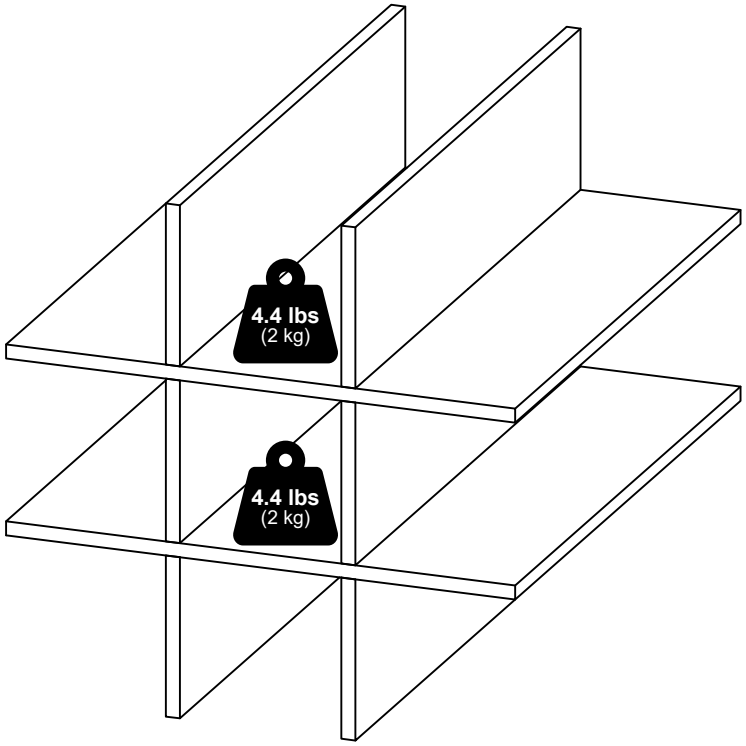





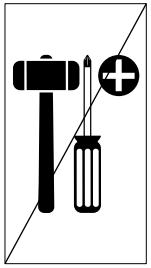

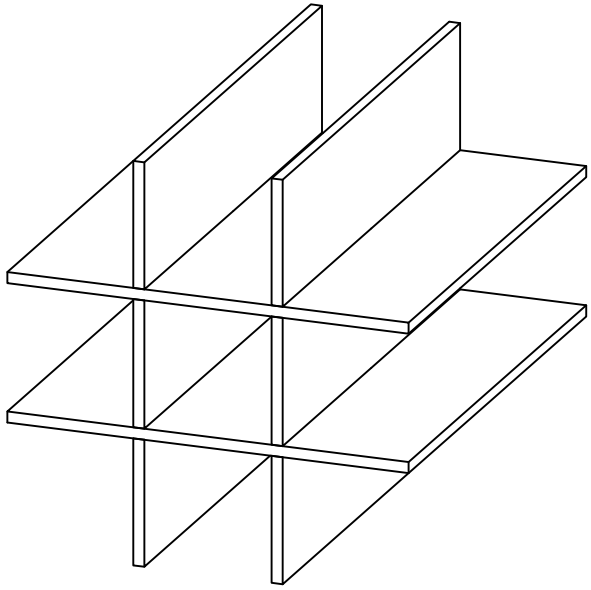

MODEL: 25326

2532620250827

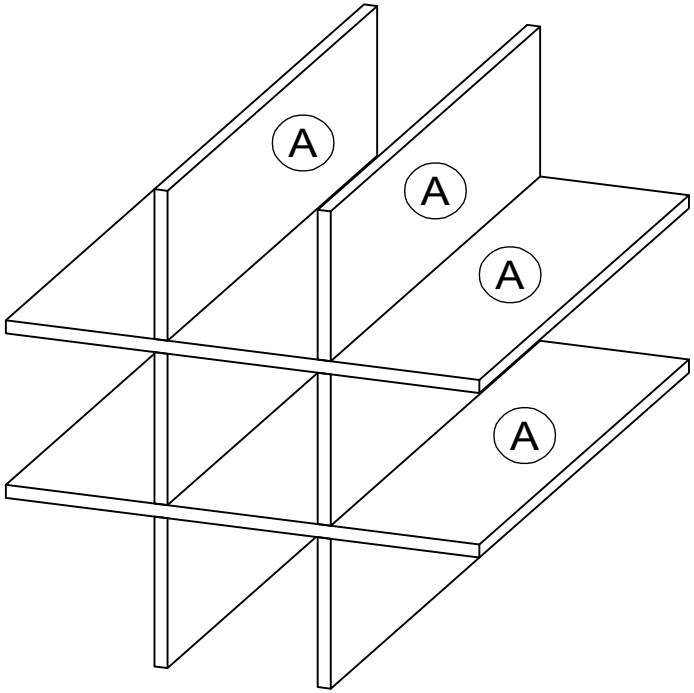

1

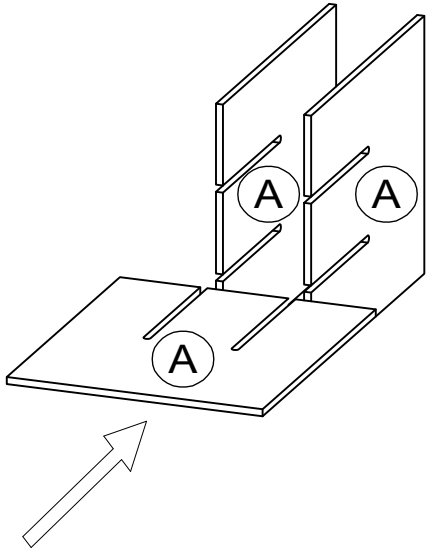

2

