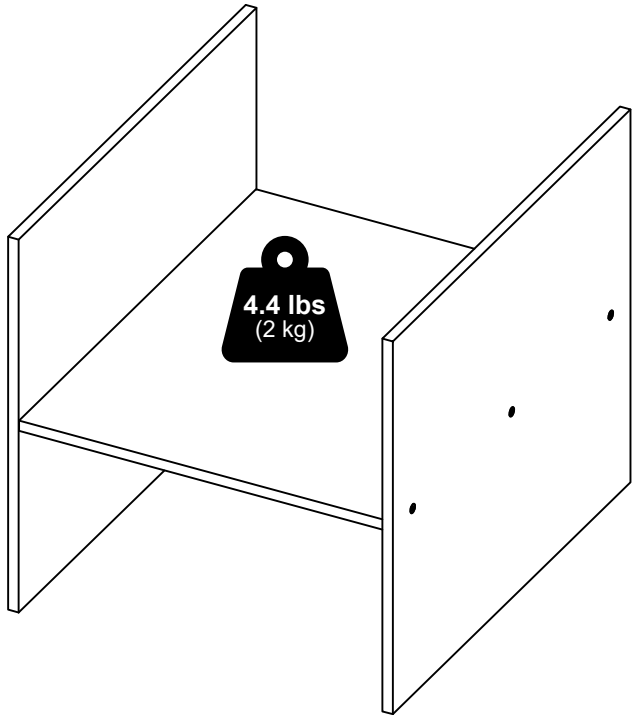





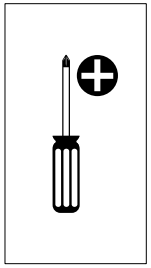

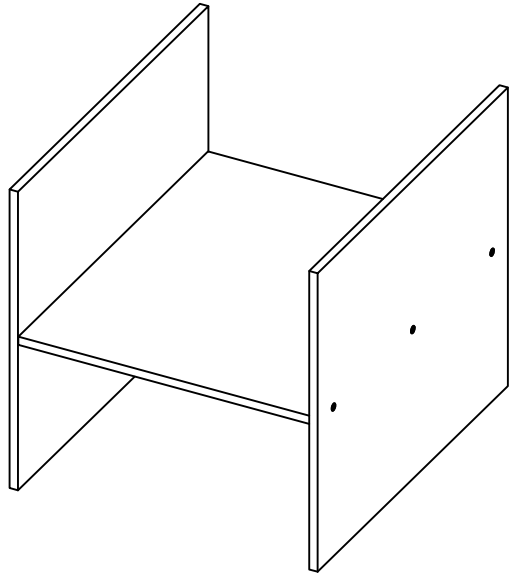

MODEL: 25327

2532720250827

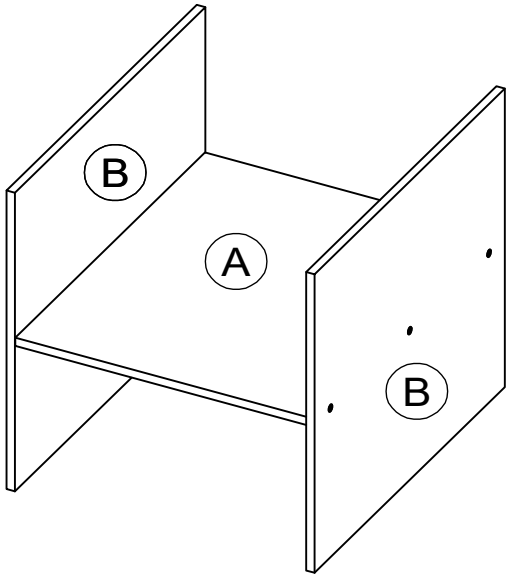

1 x 6



M3.5 x 32mm

1

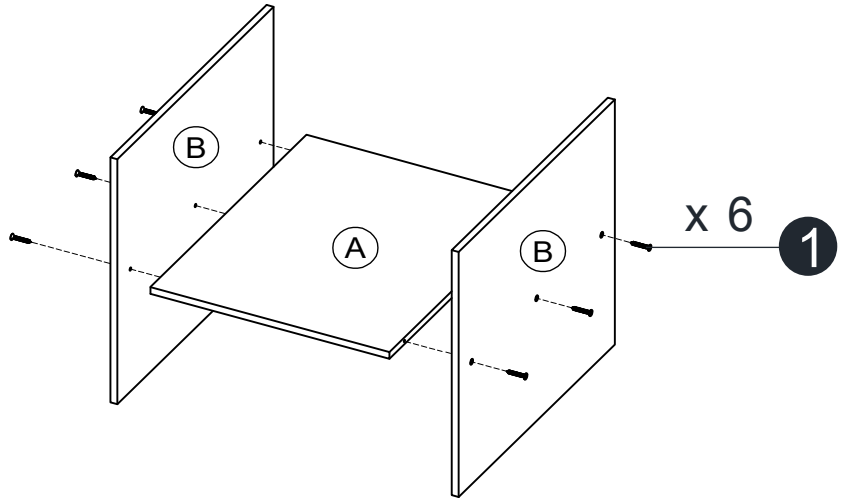

2

