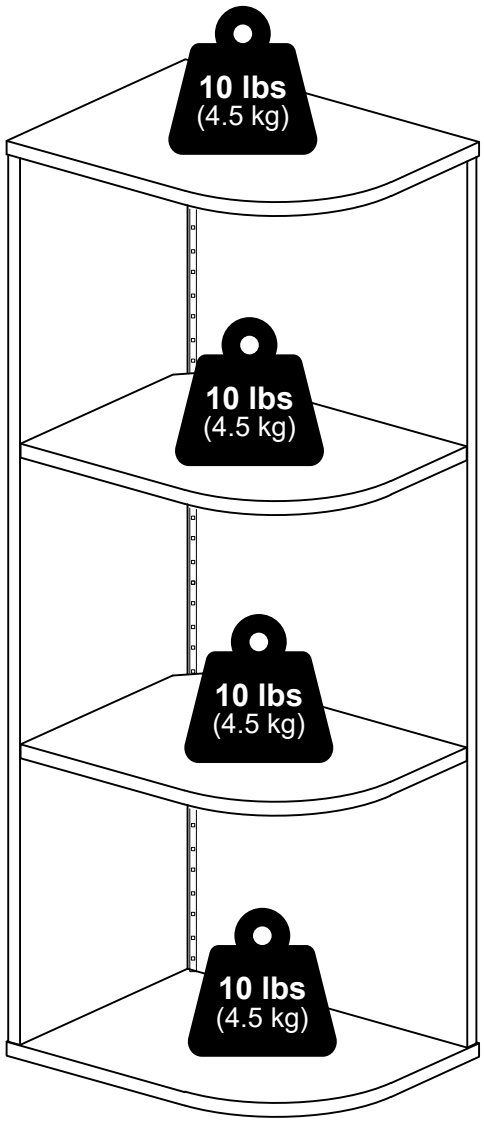

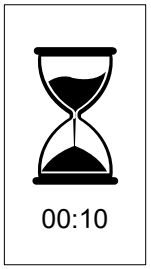

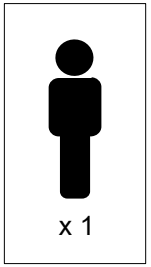

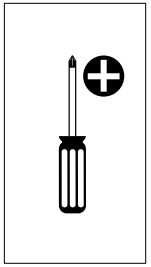

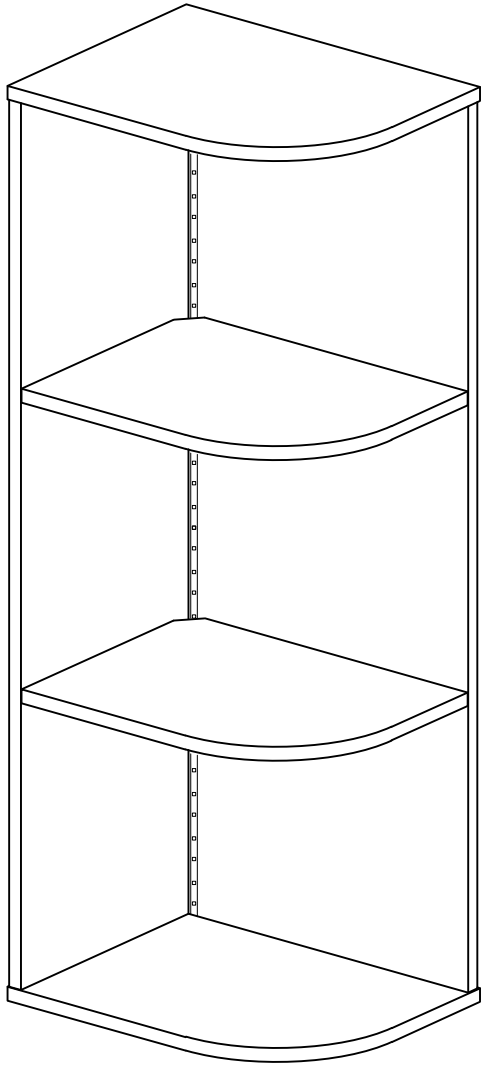

MODEL: 25579

2557920251216

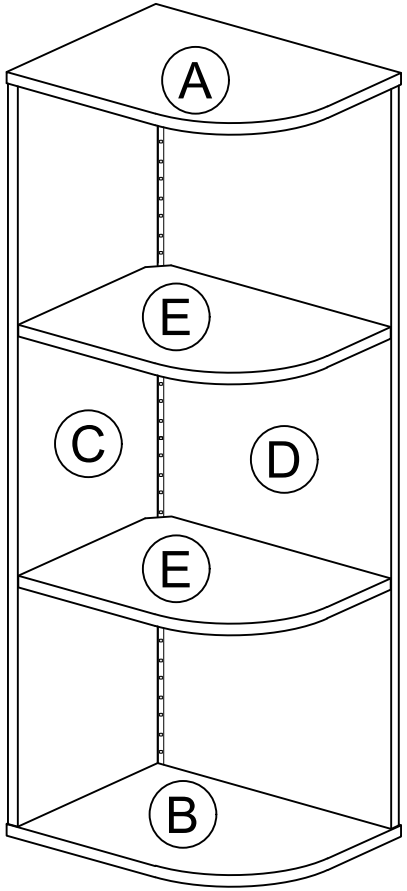

1 x 8 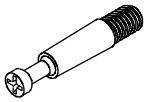	2 x 8 	3 x 11  M4 x 32mm
4 x 1 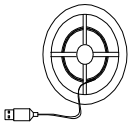		

5

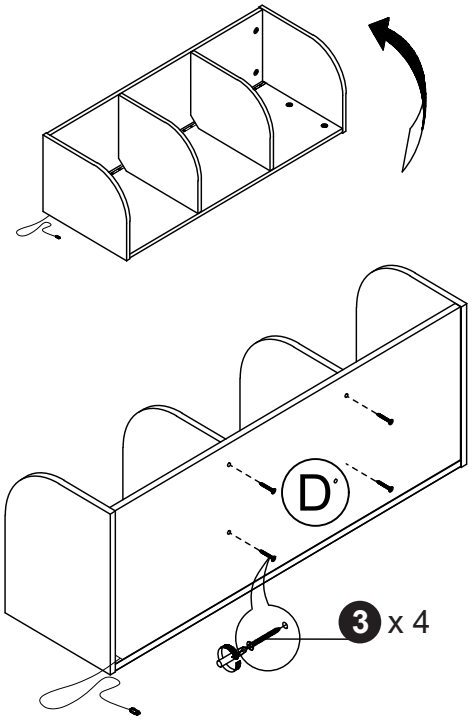

6

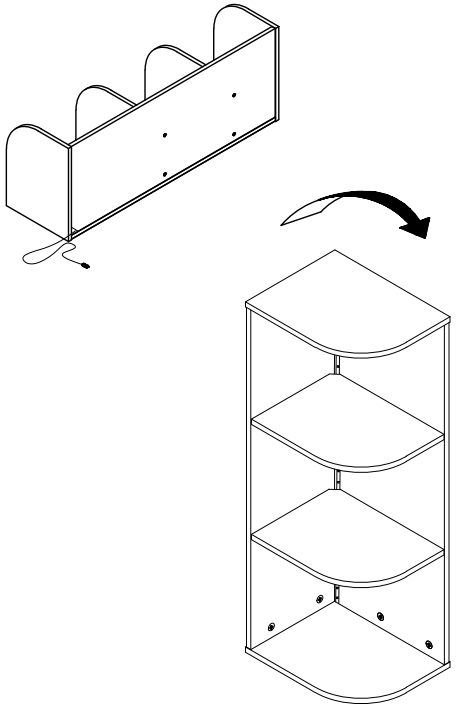

4

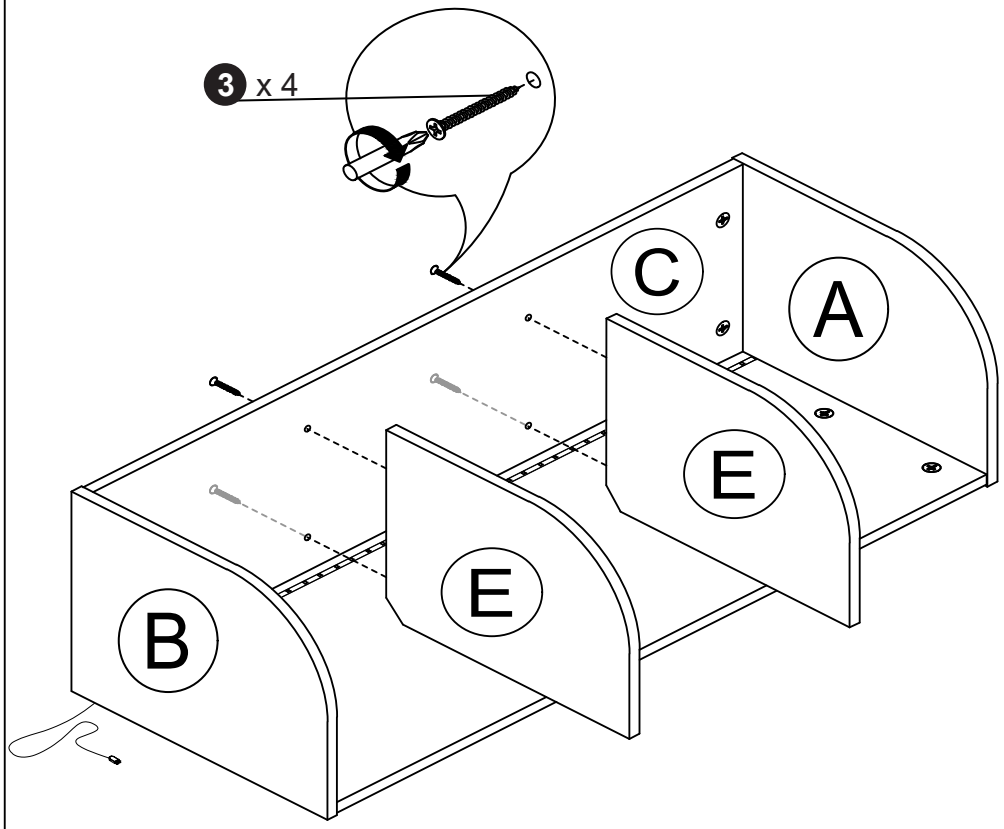

1

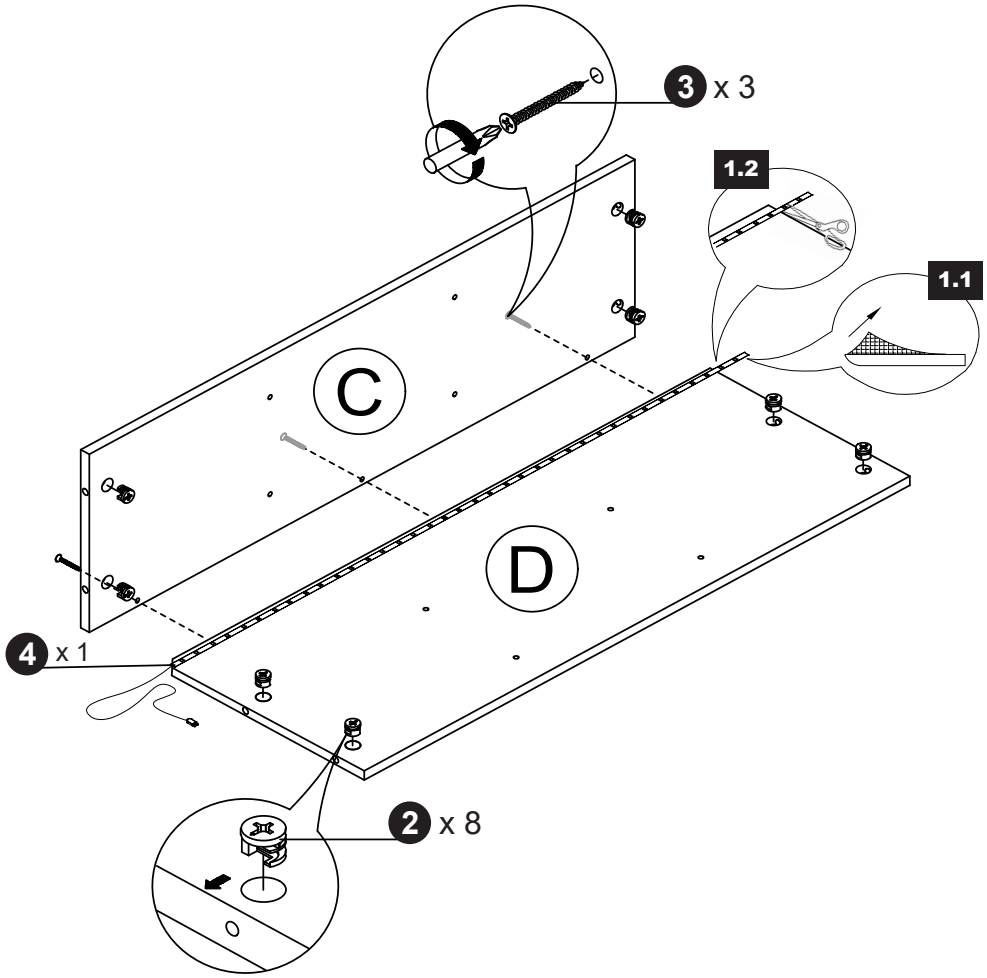

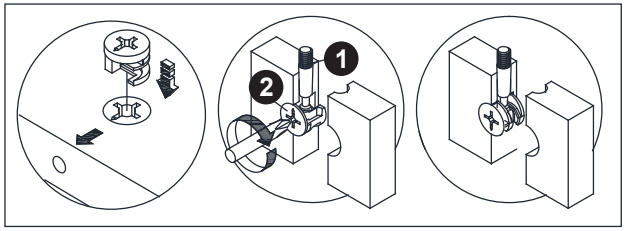

2

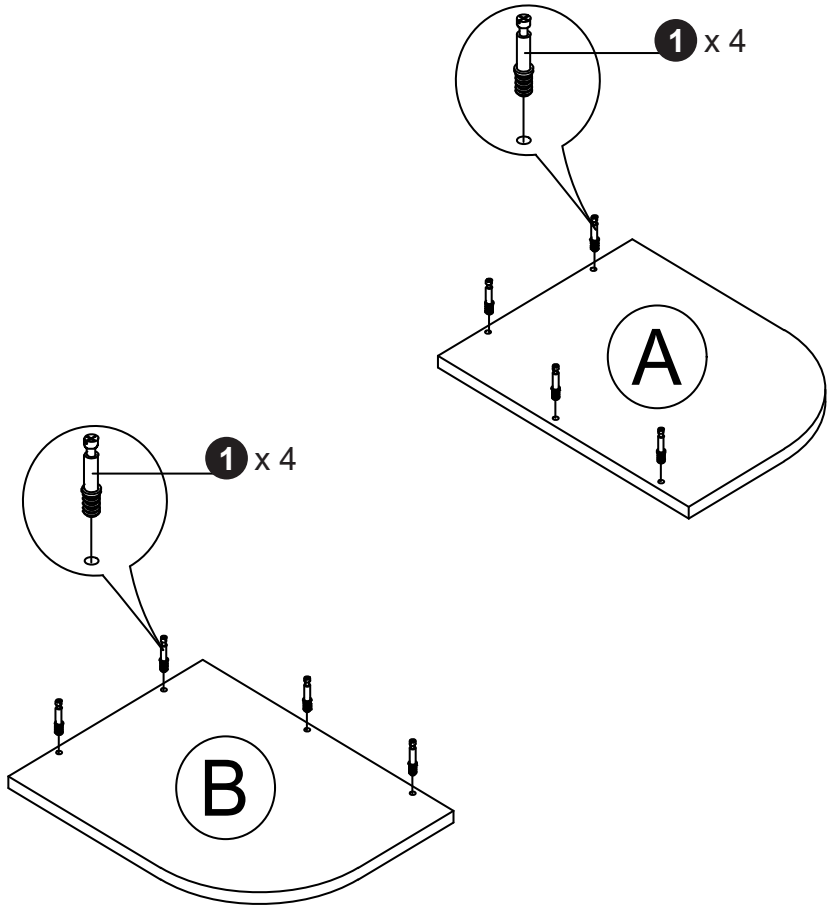

3

