3

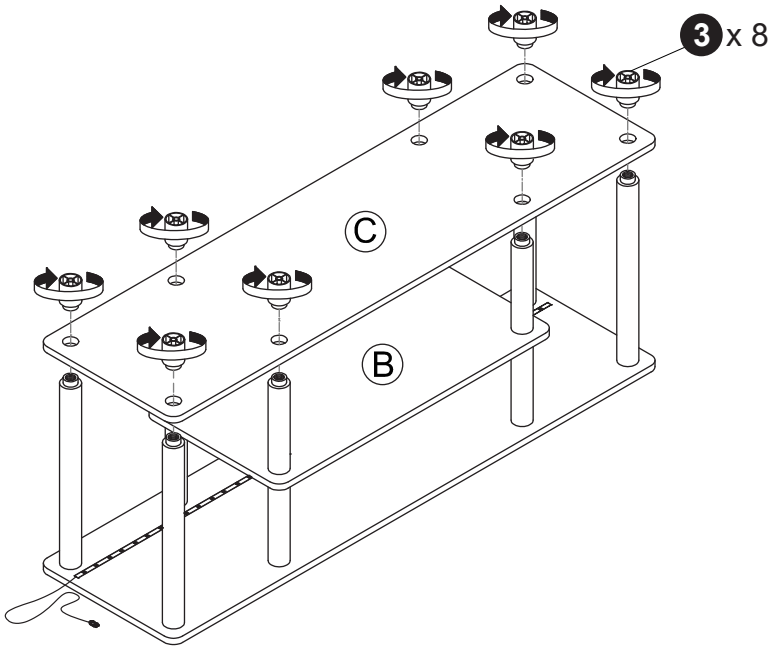

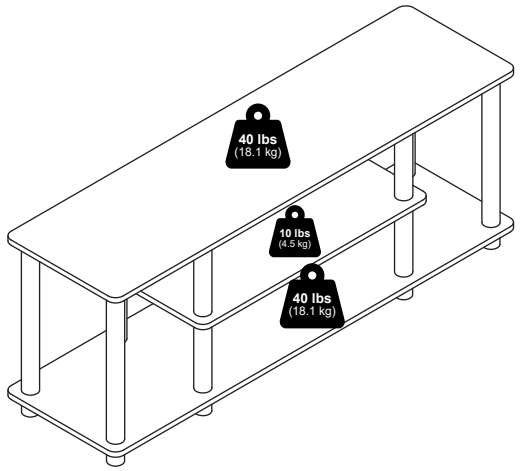





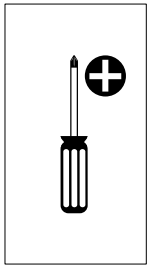

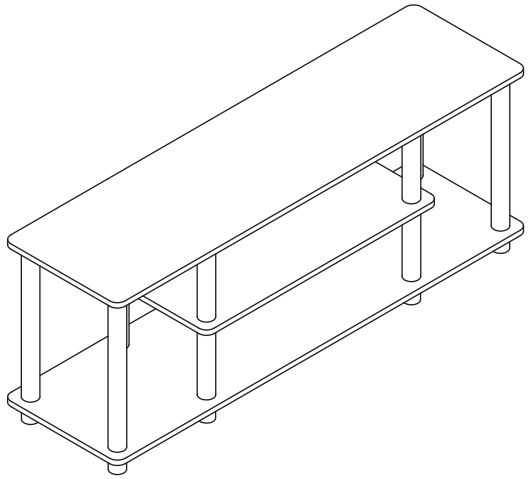

MODEL: 25587

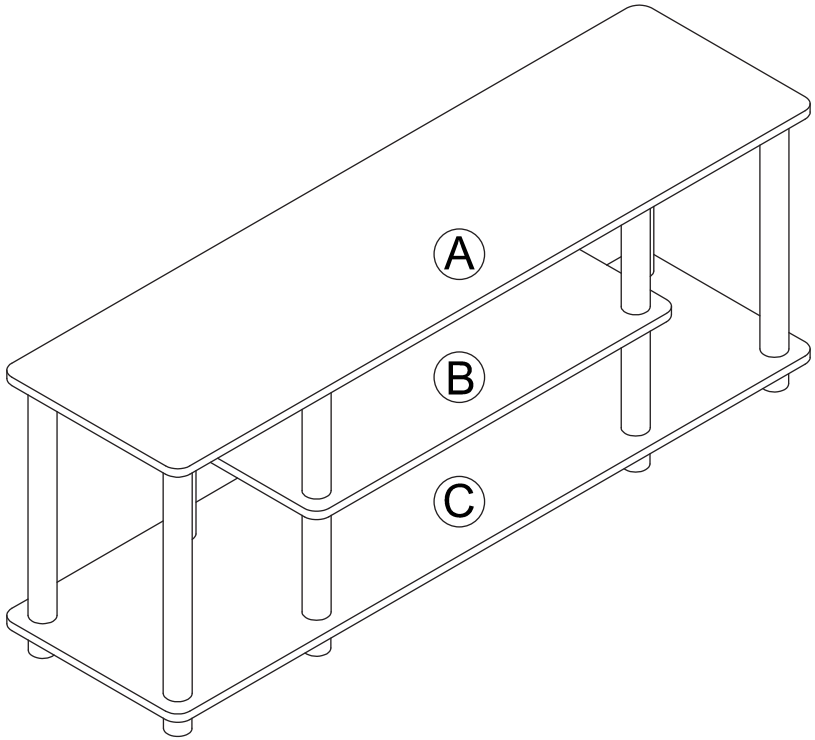

1 x 4 34 x 340mm	2 x 8 34 x 162mm	3 x 8 34 x 38mm

4 x 1

4a

4b x 2

4c x 2

1

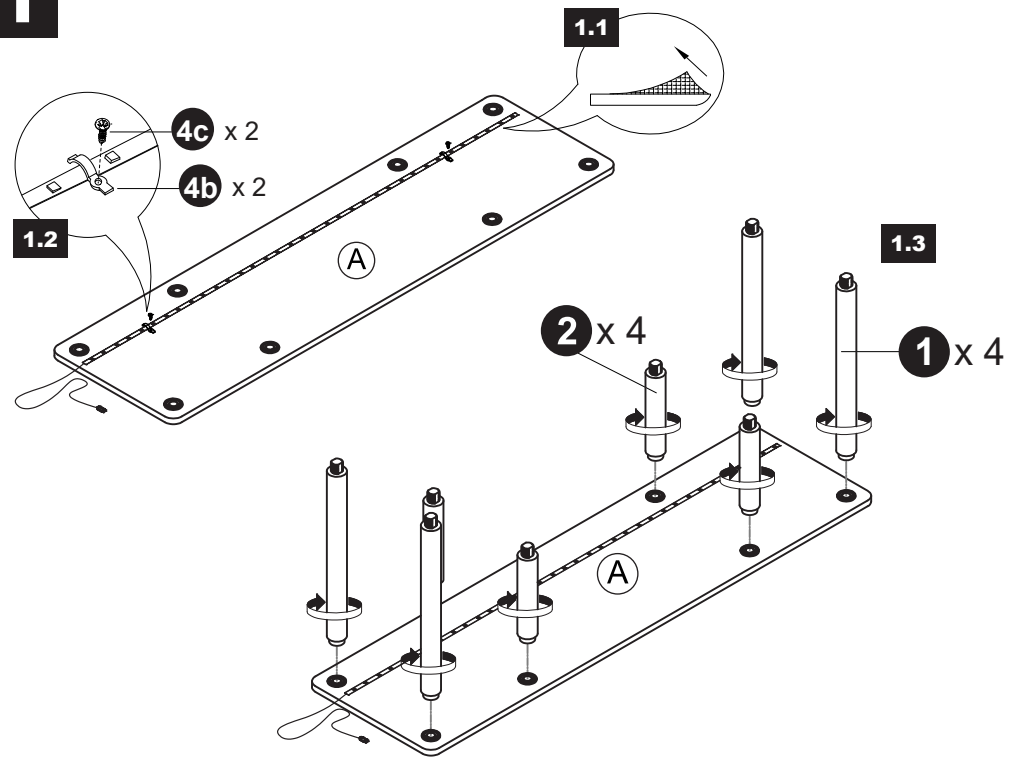

2

