

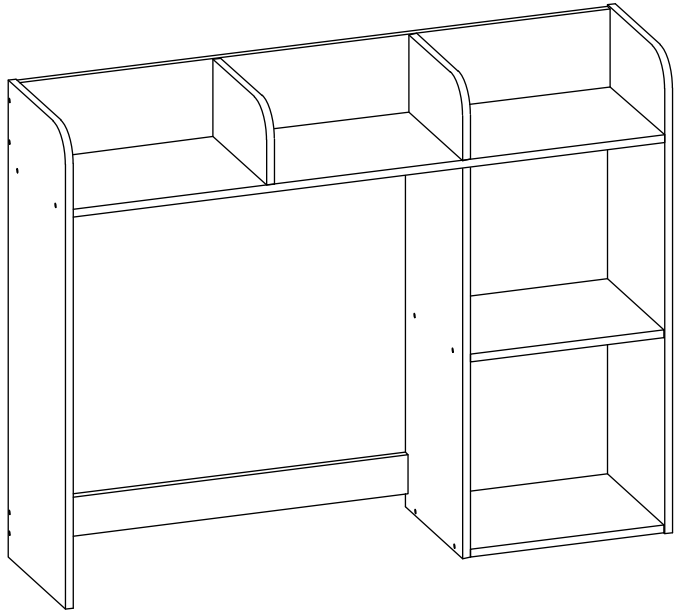

MODEL: 25588

2558820251216

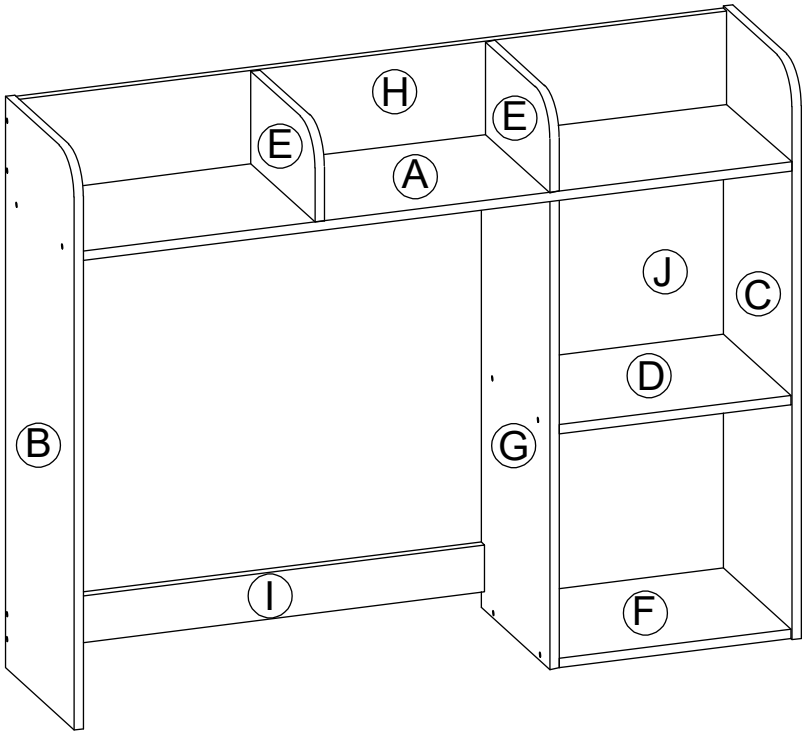

1 x 2  15 mm	**2** x 2 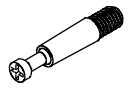 6 x 31 mm	**3** x 29  M4 x 32mm
4 x 16 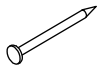 4 x 20 mm	**5** x 1 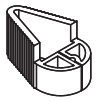	**6** x 2 6a  16 x 28mm 6b  1/1/4” 6c  #8 x 1” 6d  4 x 11 mm
7 x 1 7a  7b  x 2 7c  x 2		

9

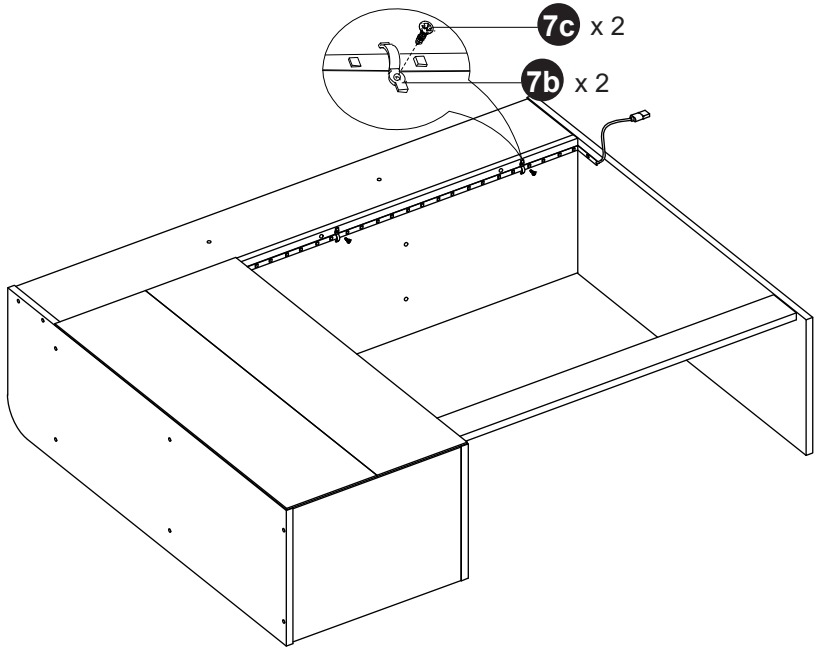

10

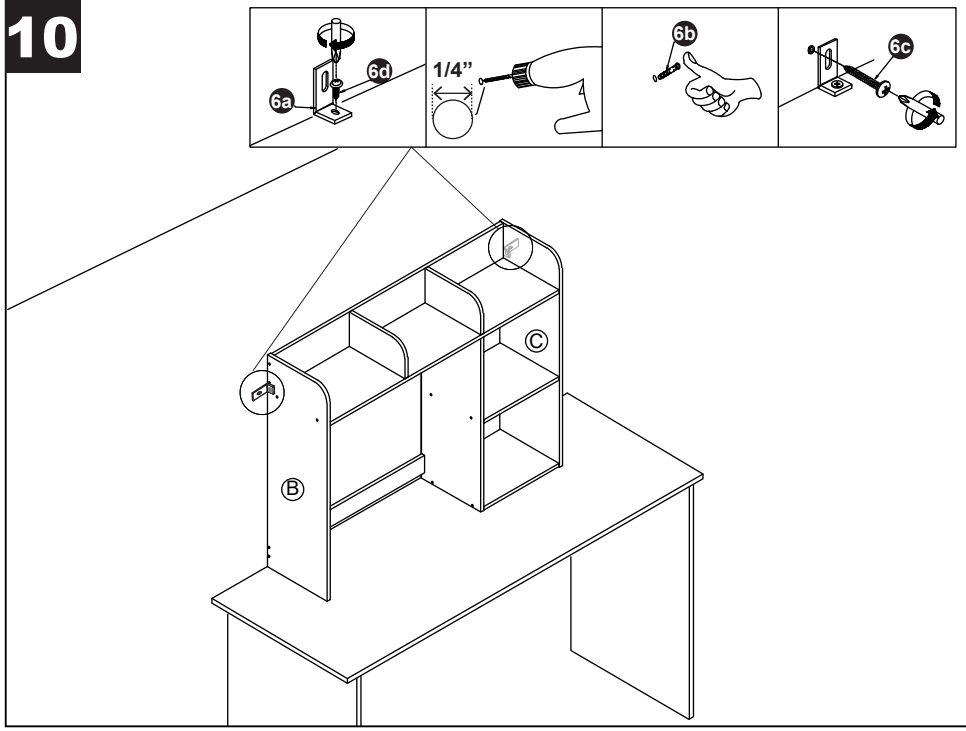

7

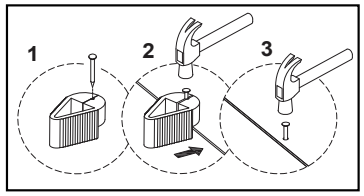

8

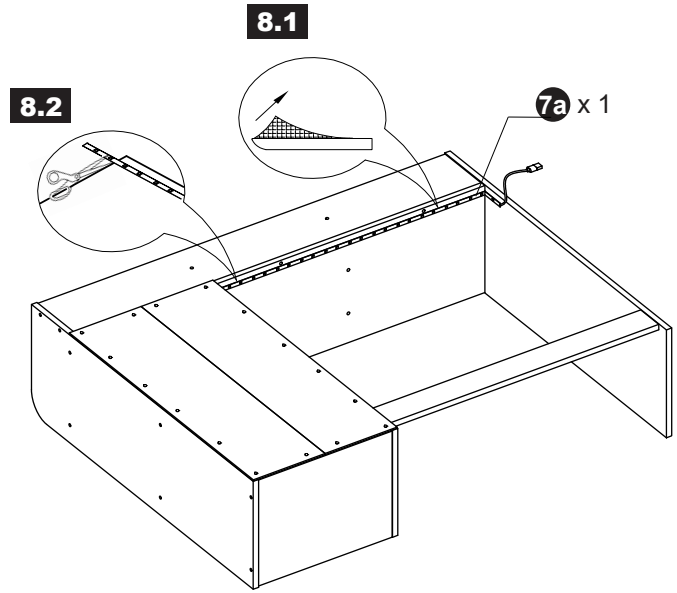

1

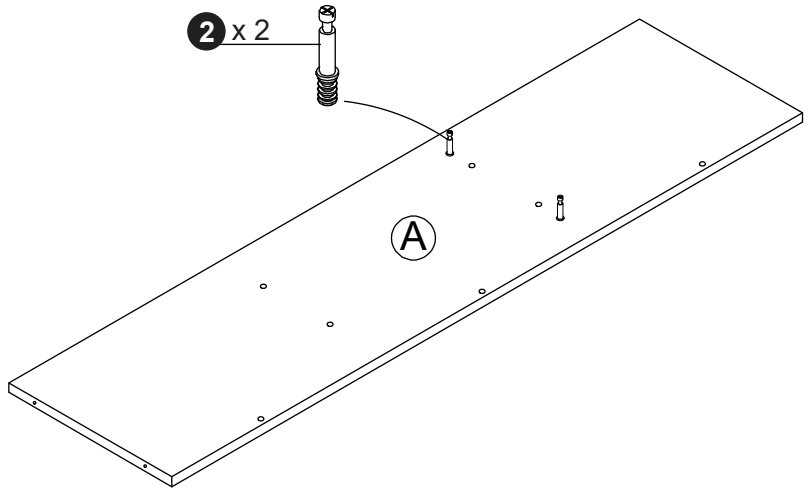

2

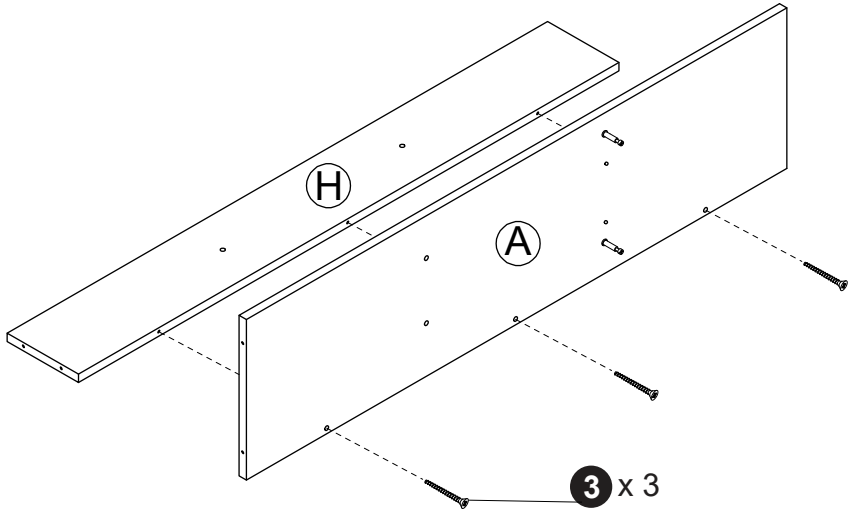

3

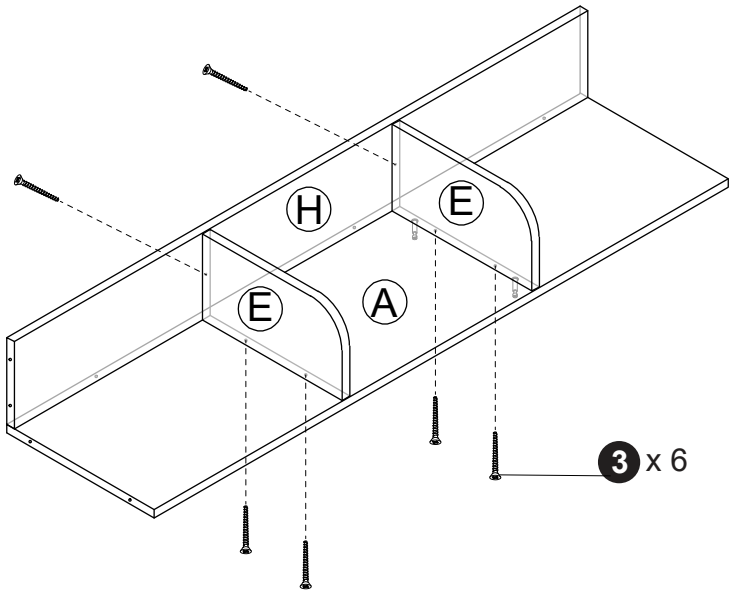

4

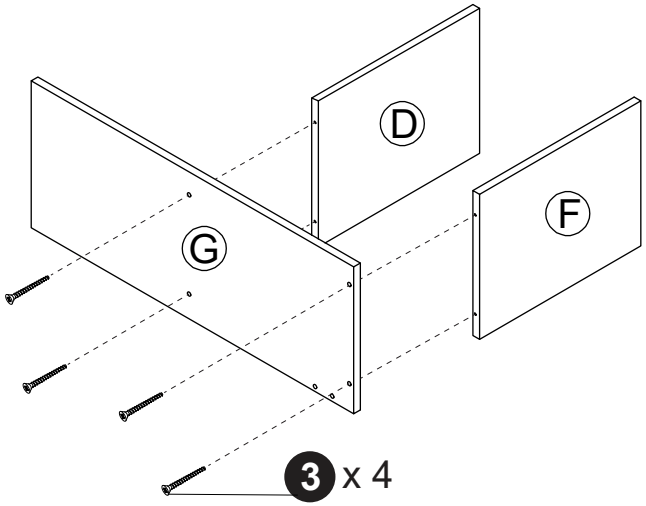

5

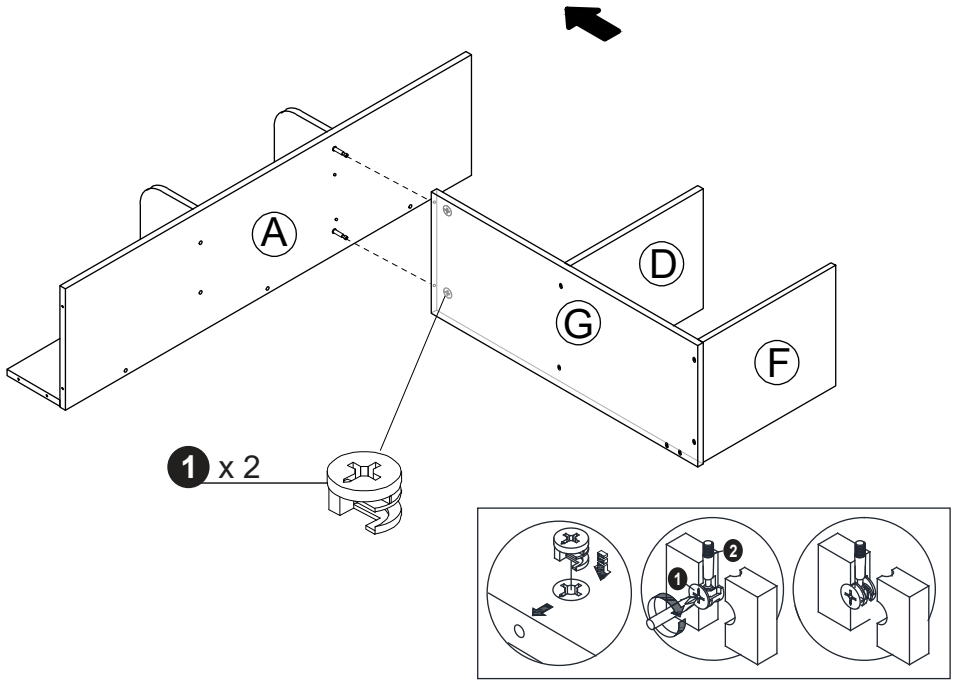

6

