3

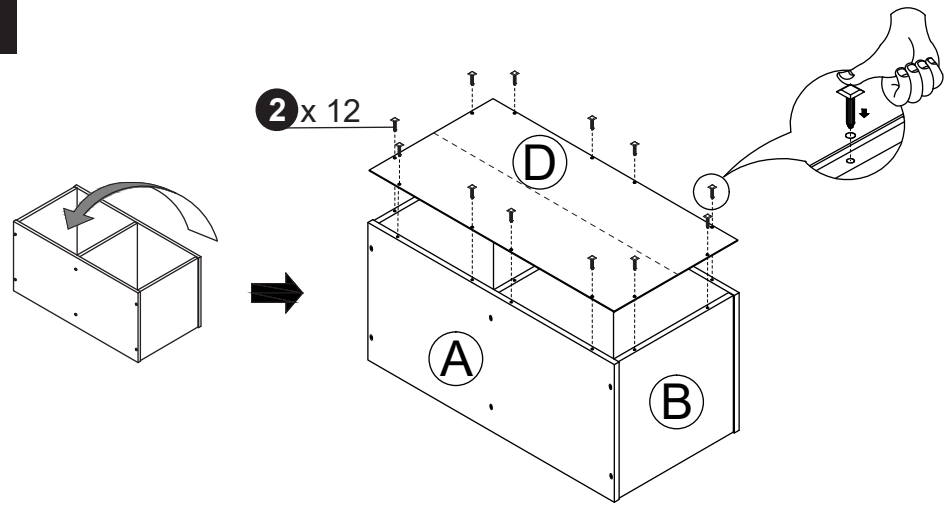

4

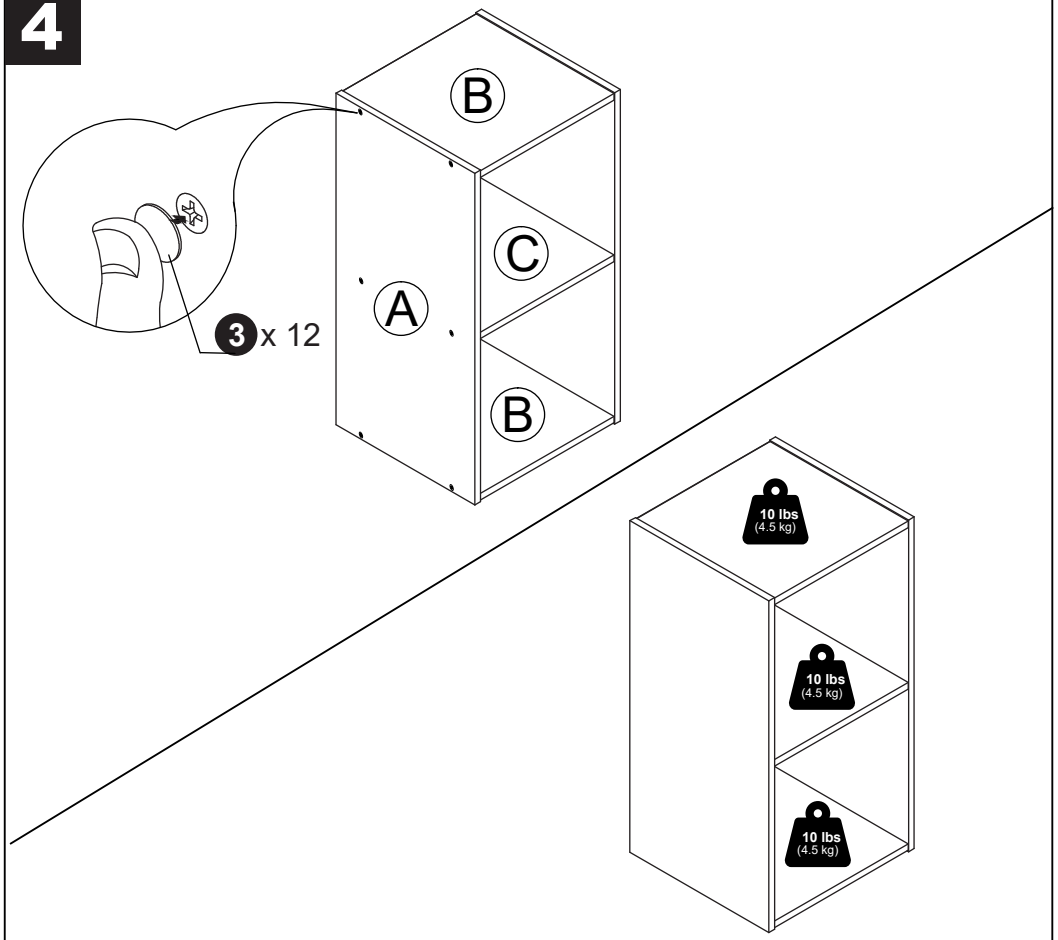



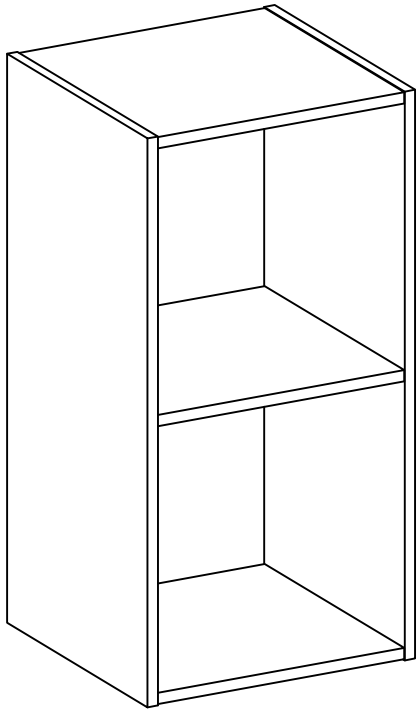

MODEL: 25627

2562720260206

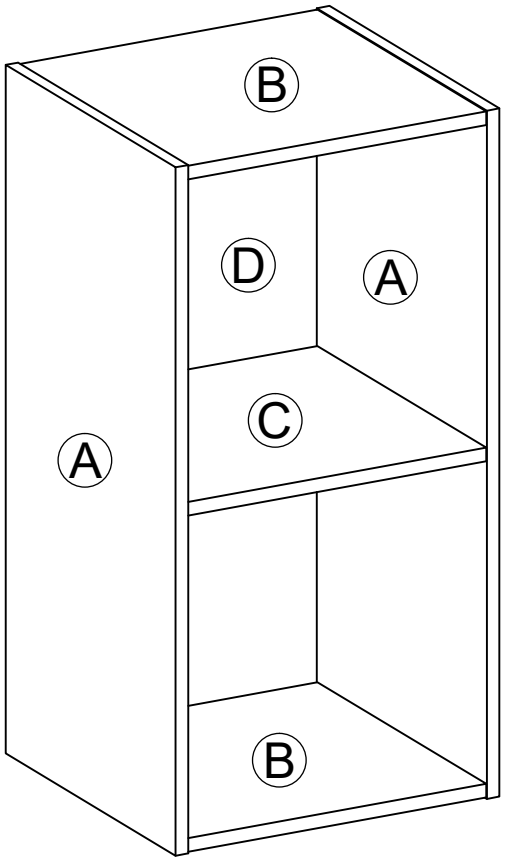

1	2	3
x 12	x 12	x 12
	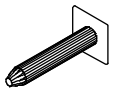	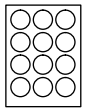
M4 x 32mm		

1

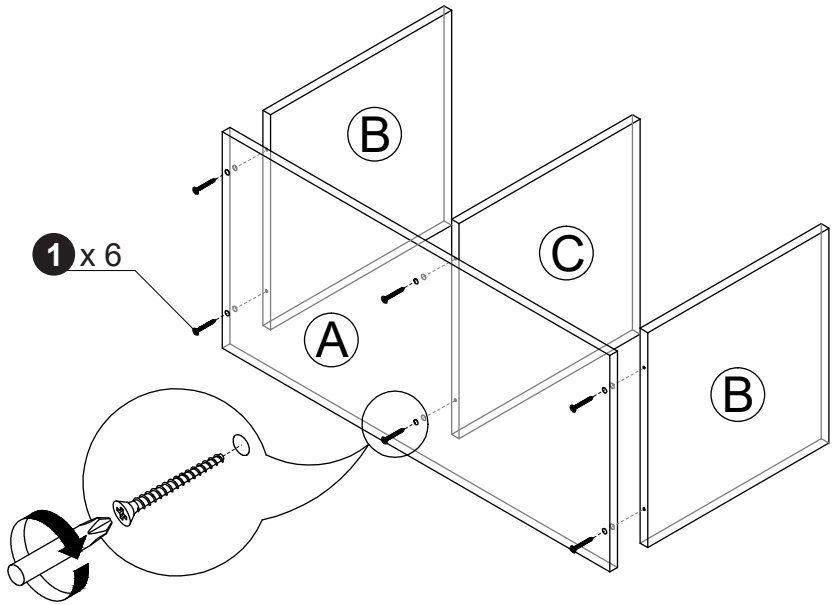

2

