8

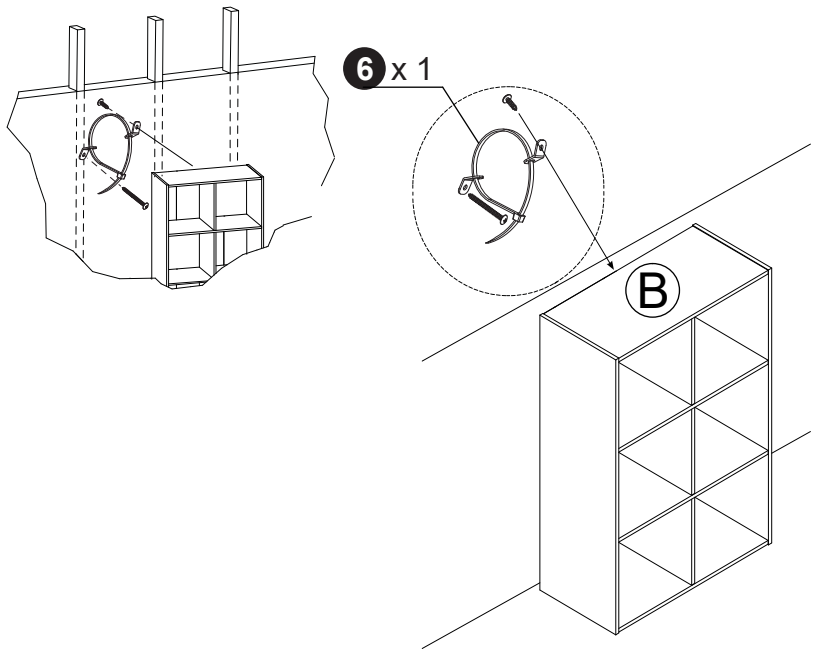

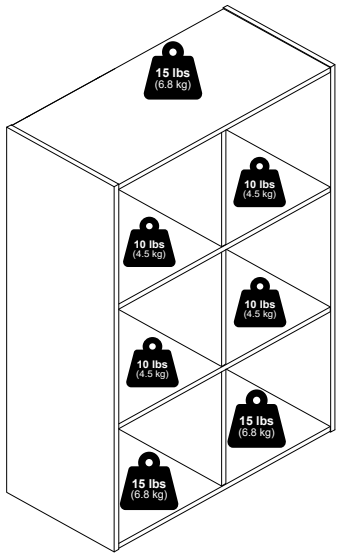

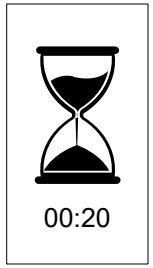



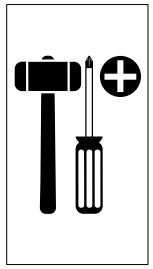

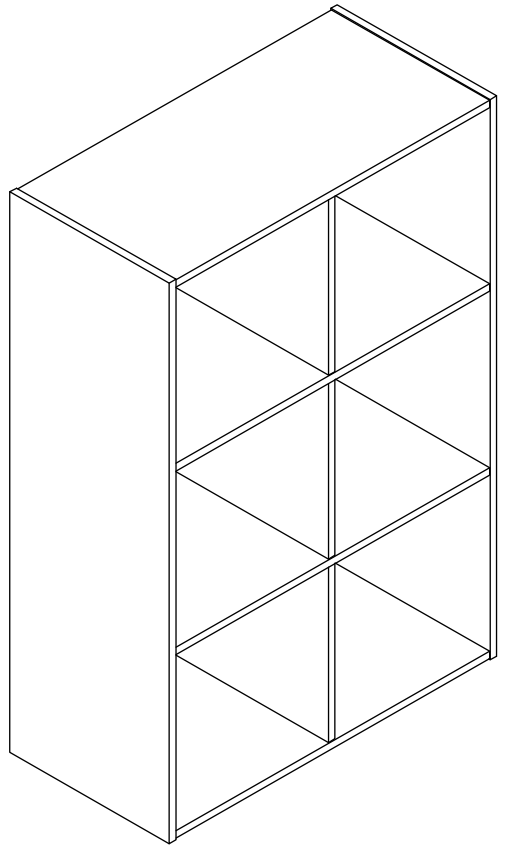

THIS PRODUCT MUST ALWAYS BE MOUNTED A WALL OR STUD FOR USE.

MODEL: 25630

2563020260109

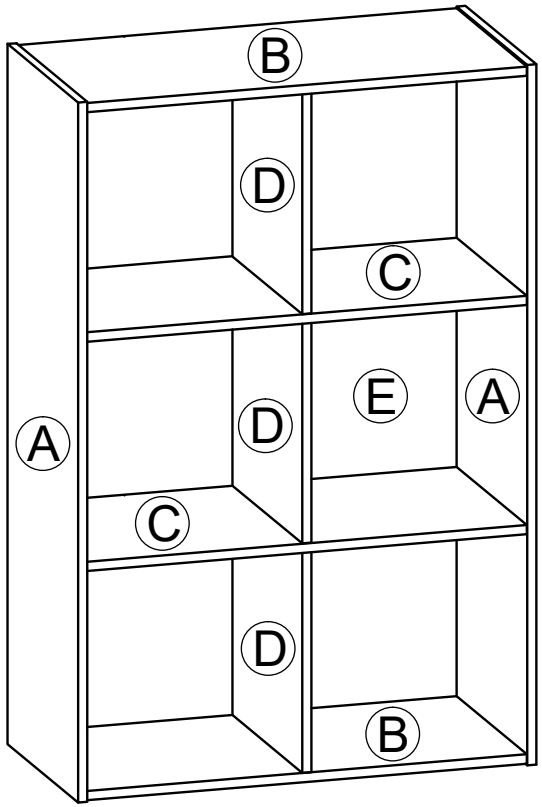

1 x 18  M4 x 32mm	2 x 20 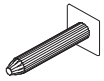	3 x 4 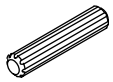 M6 x 40mm	4 x 4  M6 x 20mm
5 x 18 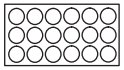	6 x 1 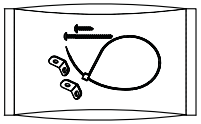		

7

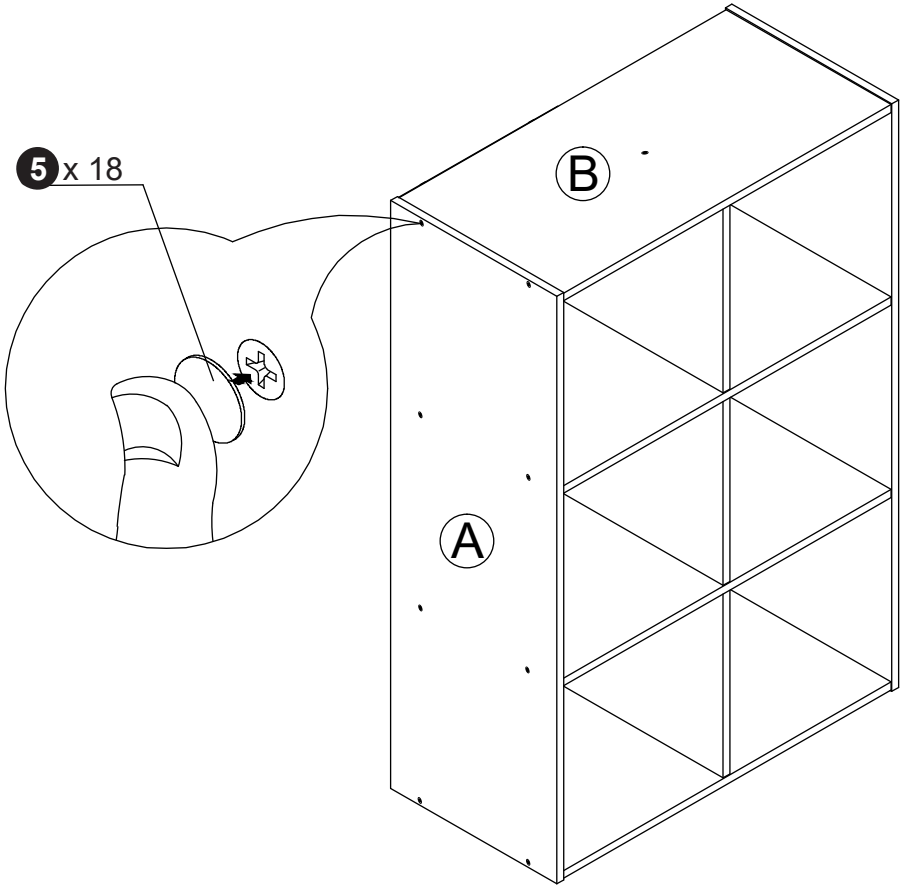

5

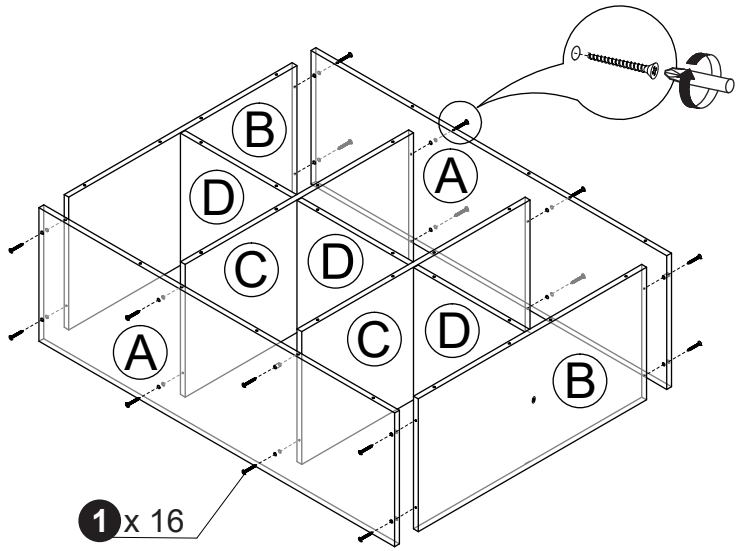

6

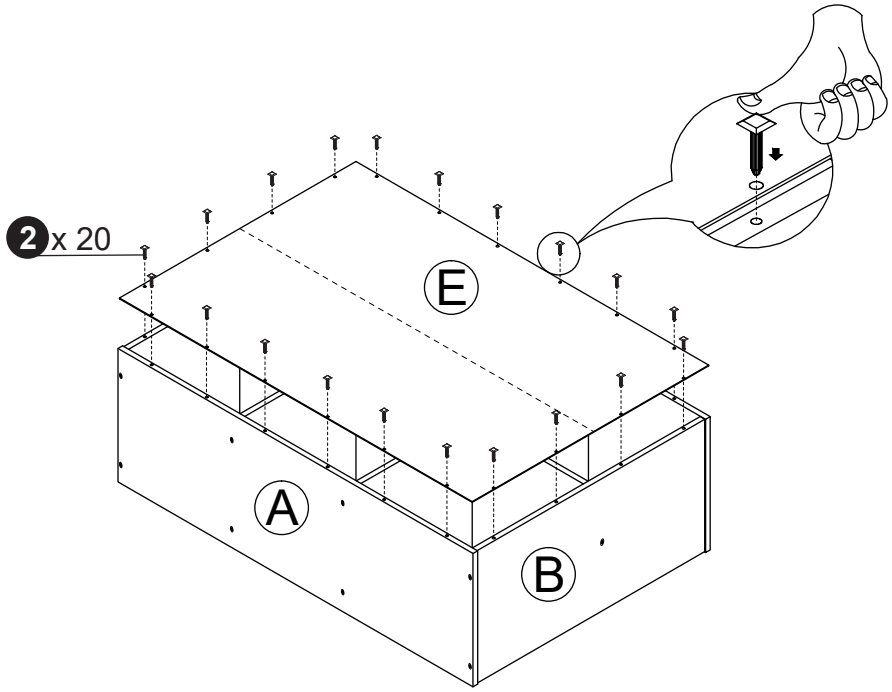

1

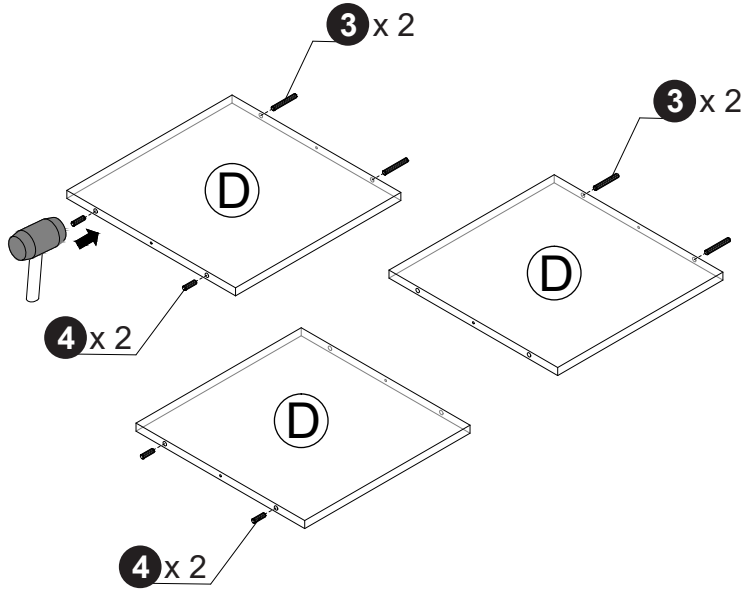

2

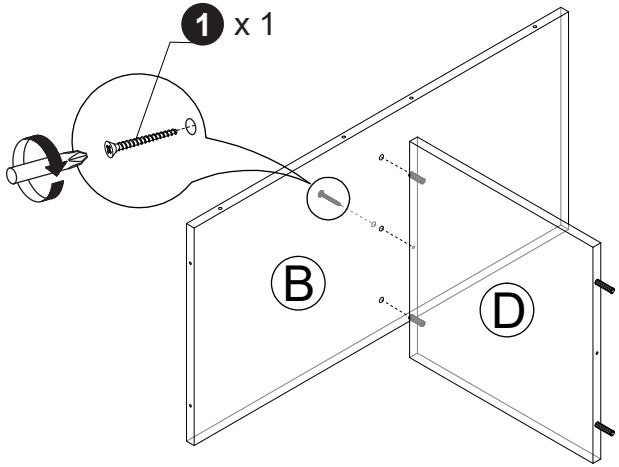

3

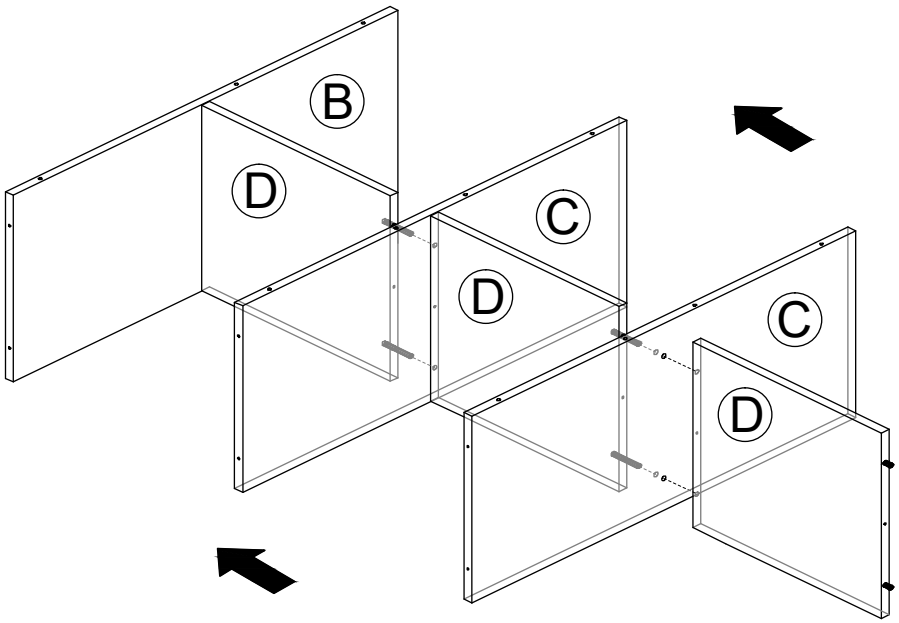

4

