## 6

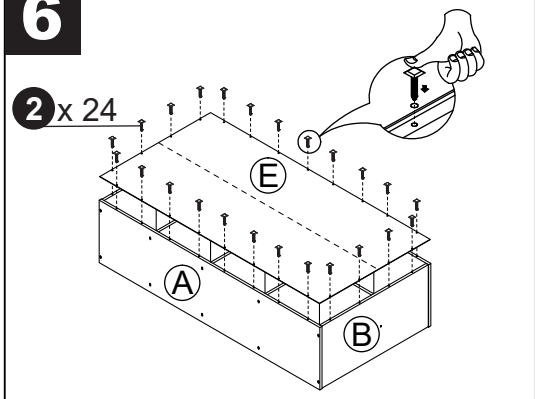


## 7

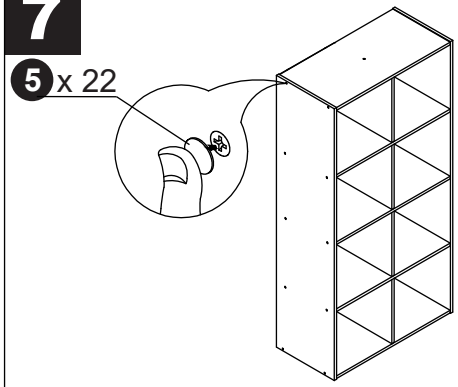


## 8

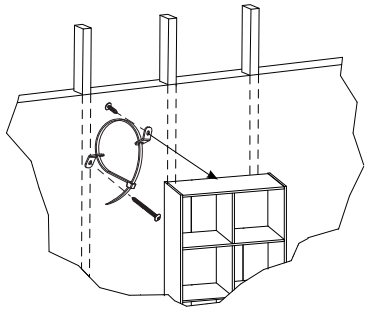

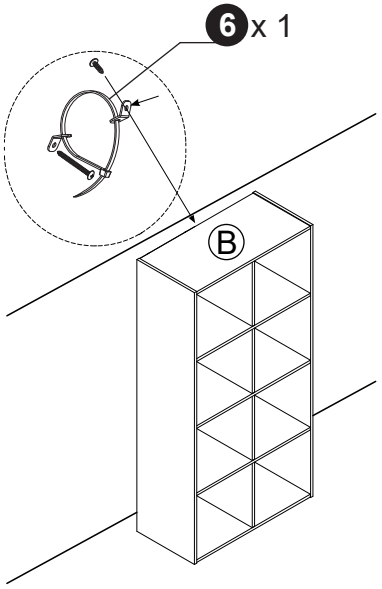


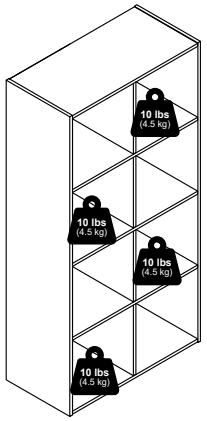










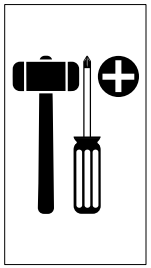

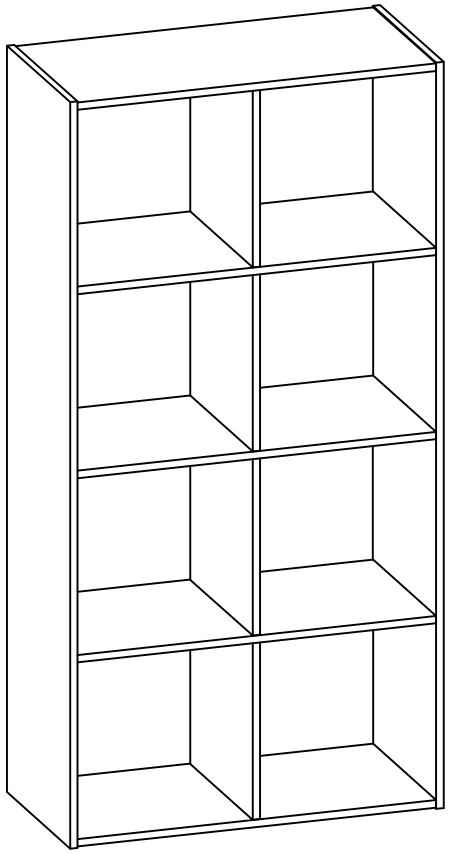



THIS PRODUCT MUST ALWAYS BE MOUNTED A WALL OR STUD FOR USE.

**MODEL: 25631**



2563120260210

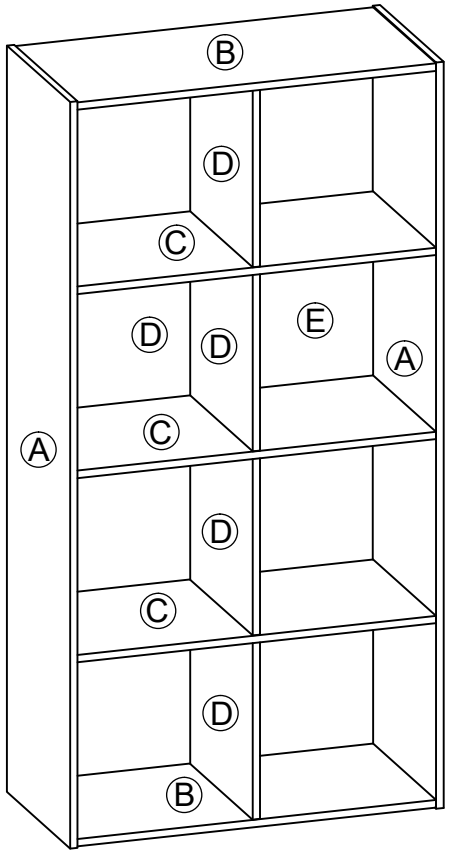


| | | |
|---|---|---|
| 1 x 22<br><br>M4 x 32mm | 2 x 24<br>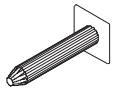 | 3 x 6<br>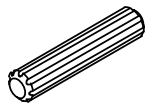<br>M6 x 40mm |
| 4 x 4<br>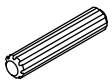<br>M6 x 20mm | 5 x 22<br> | 6 x 1<br>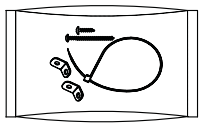 |



**1**

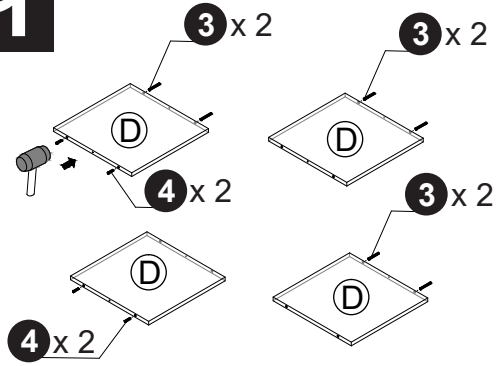


**2**

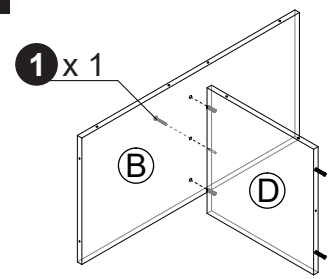


**3**

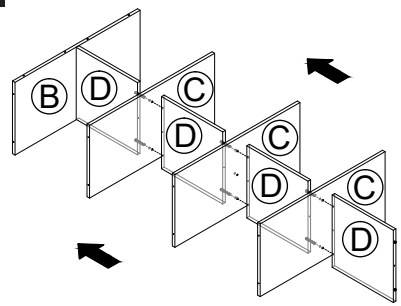


**4**

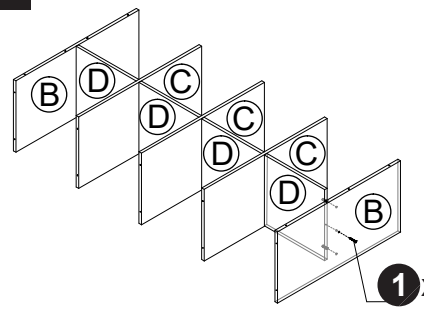


**5**

