8

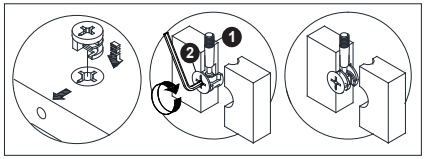

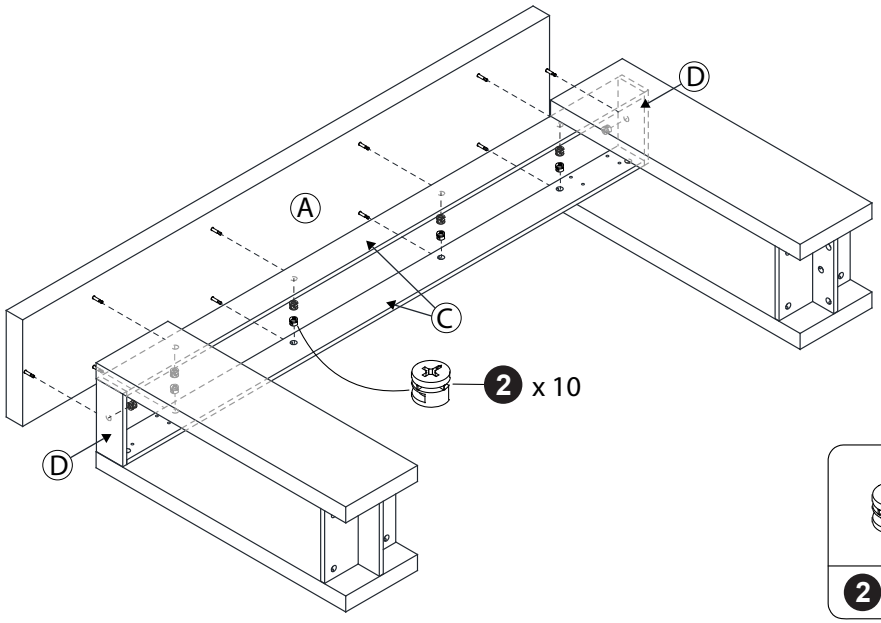

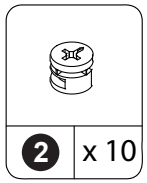

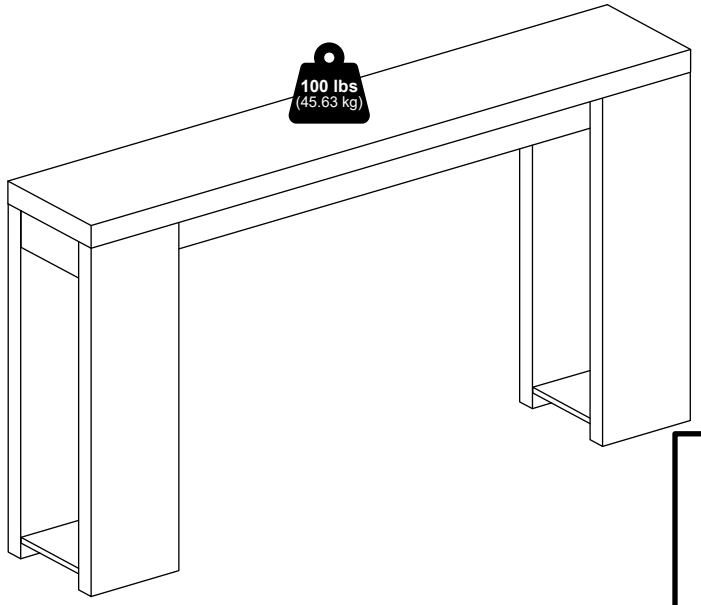





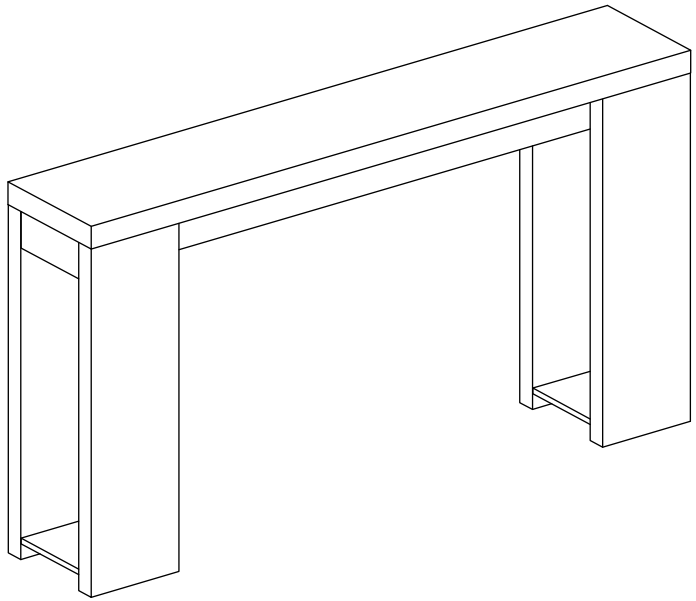

MODEL: 25643

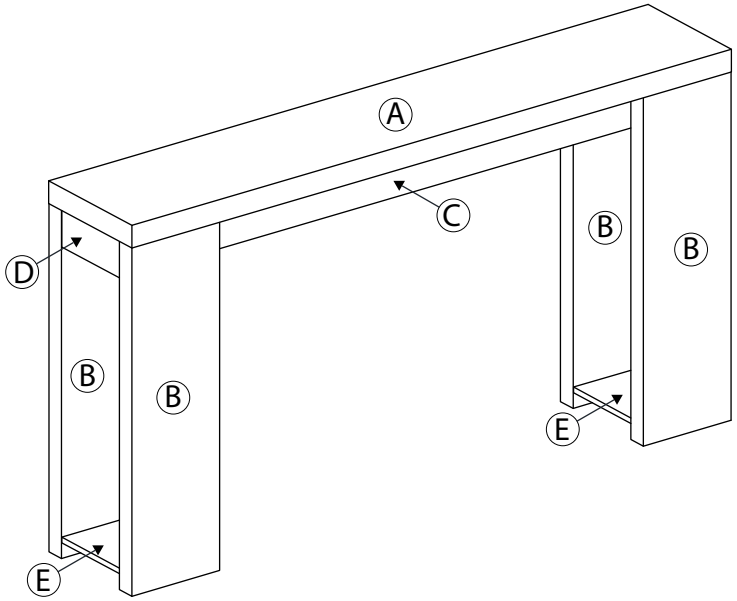

1 x 28 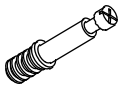	2 x 28 	3 x 16 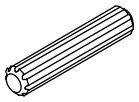 M5 x 30mm
4 x 16  M4 x 30mm	5 x 1  M4	

7

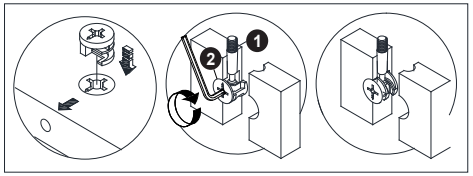

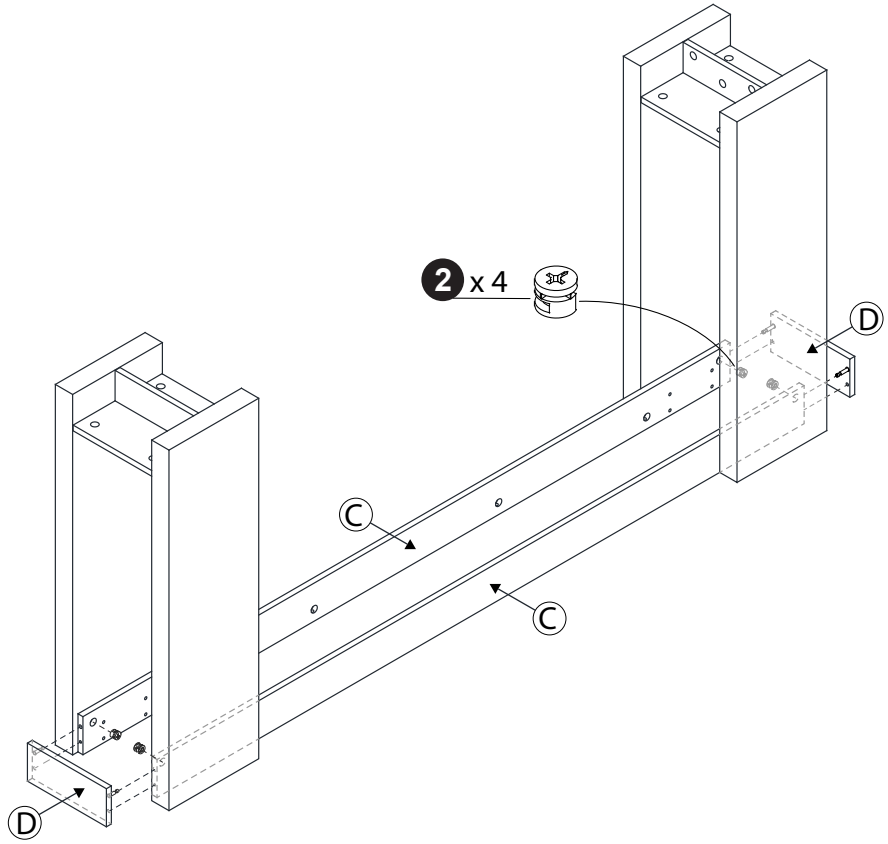

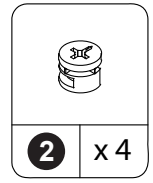

5

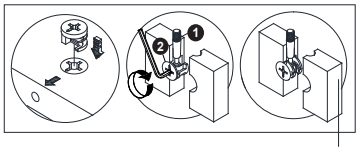

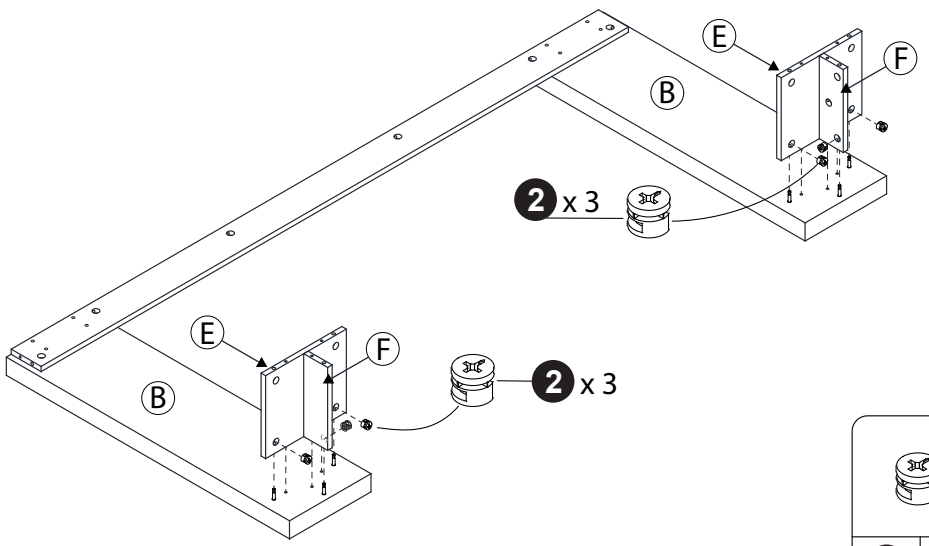
E
F
B
2 x 3
E
F
B
2 x 3

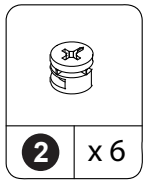
2 x 6

6

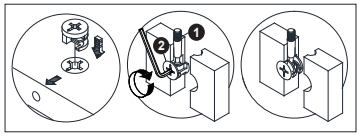

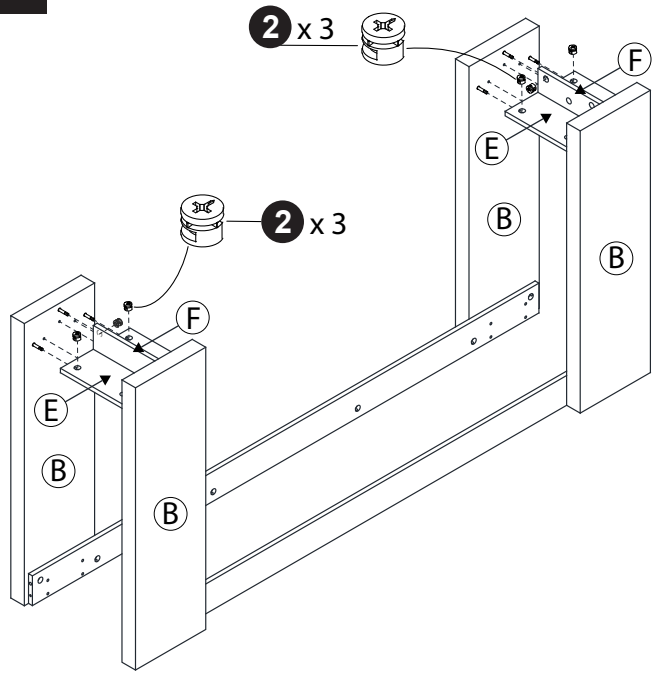
2 x 3
F
E
B
B
2 x 3
F
E
B
B


x 2

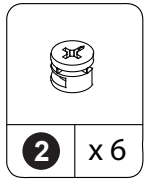
2 x 6

1

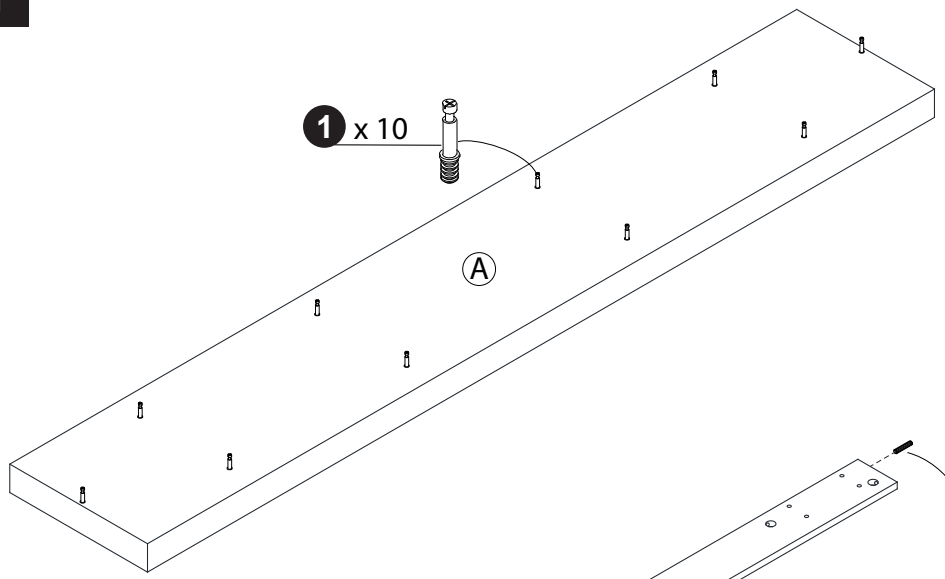
1 x 10
A

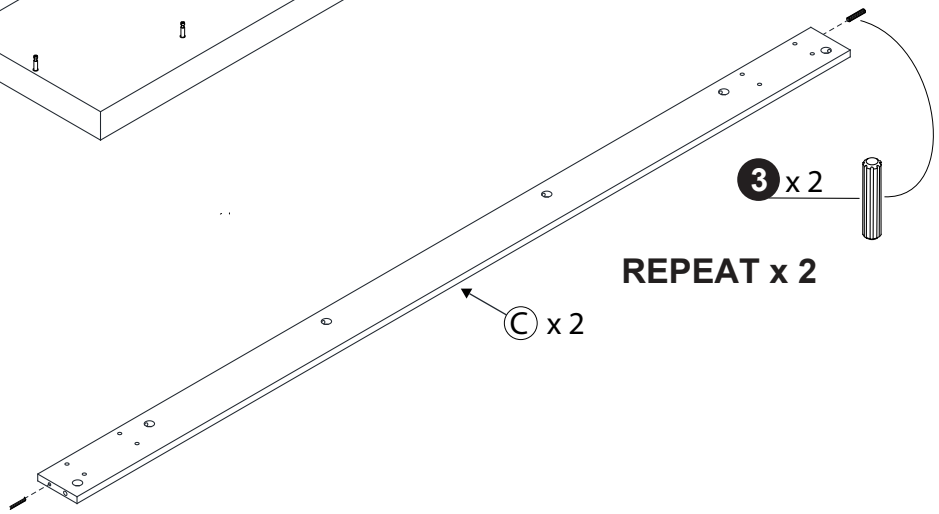
3 x 2
REPEAT x 2
C x 2

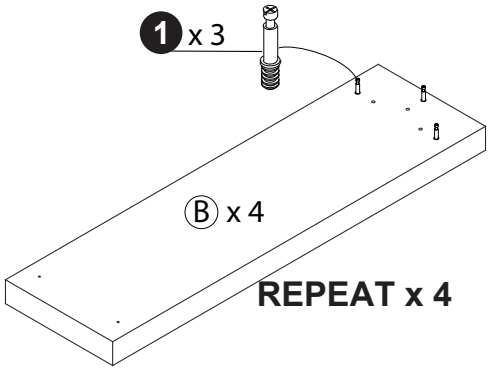
1 x 3
B x 4
REPEAT x 4

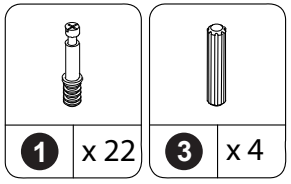
1 x 22
3 x 4

2

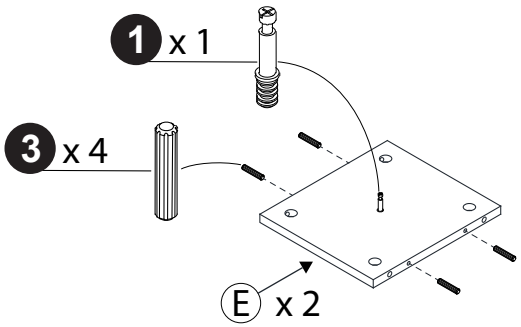

REPEAT x 2

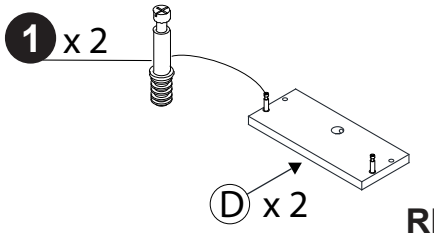

REPEAT x 2

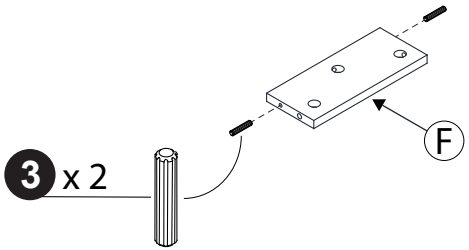

REPEAT x 2

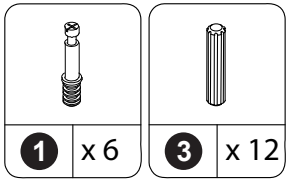

3

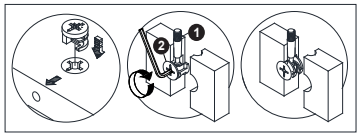

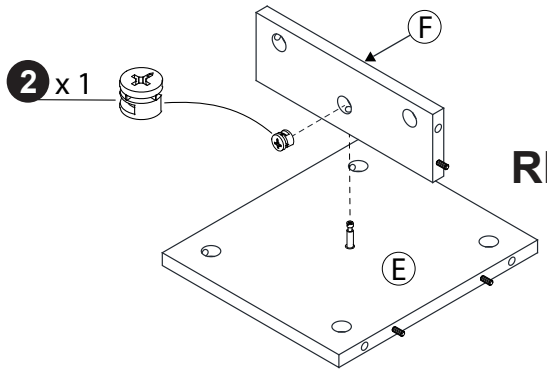

REPEAT x 2

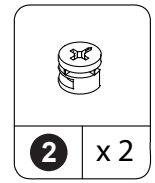

4

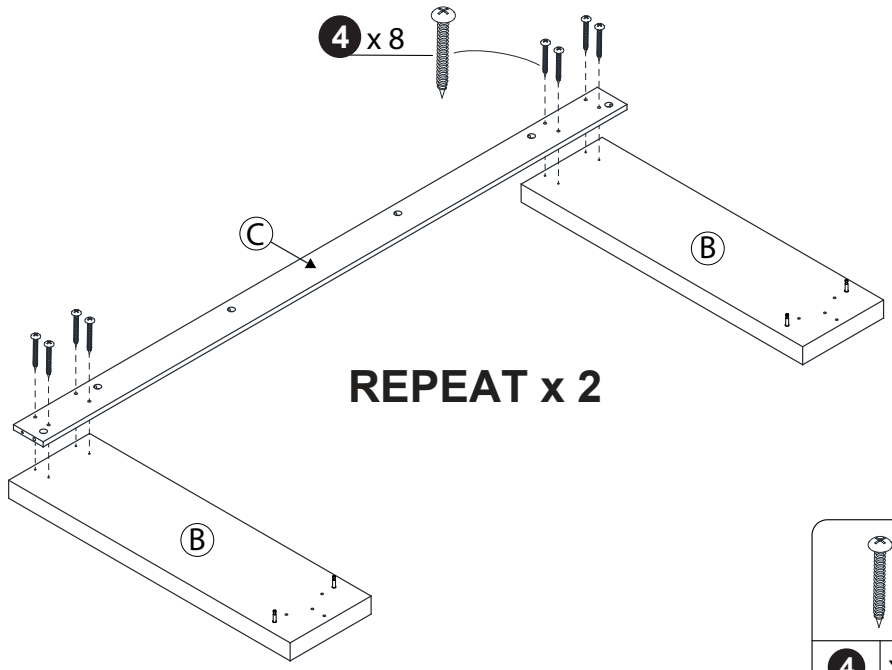

REPEAT x 2

