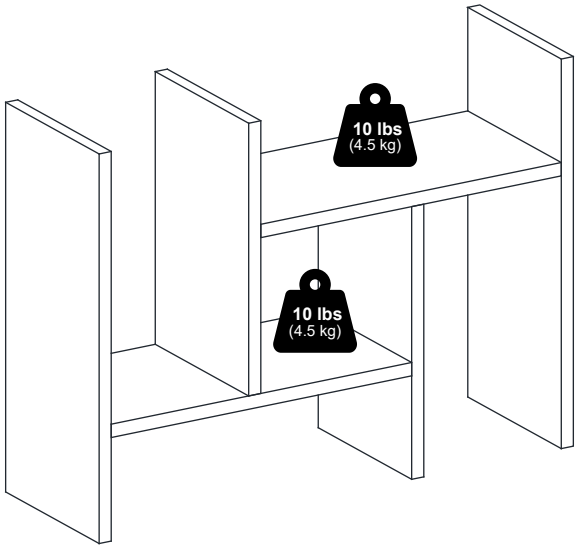



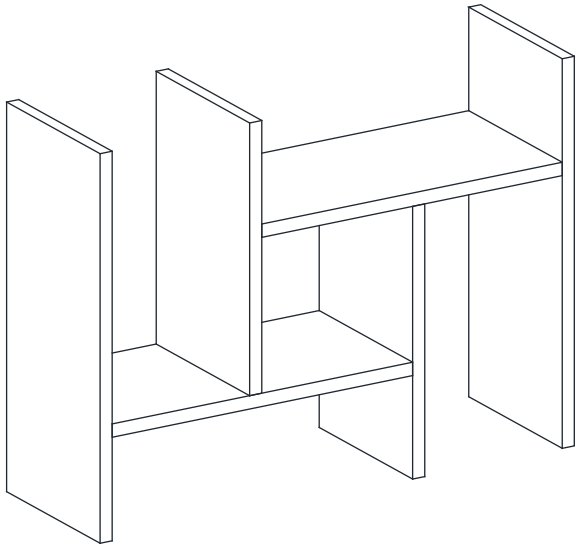

MODEL: 25644

2564420260206

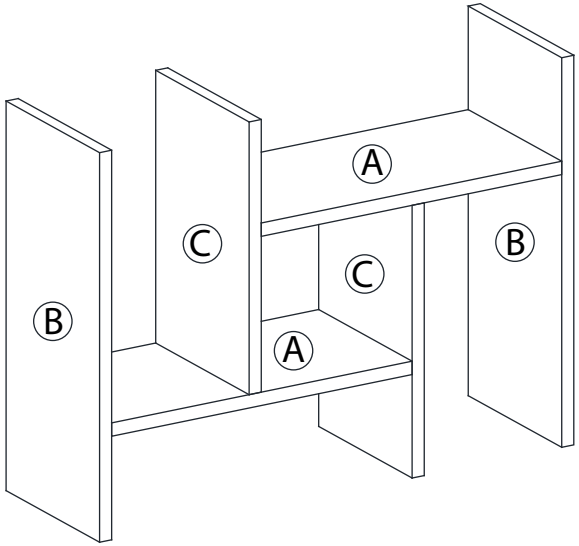

1 x 8



M4 x 32mm

1

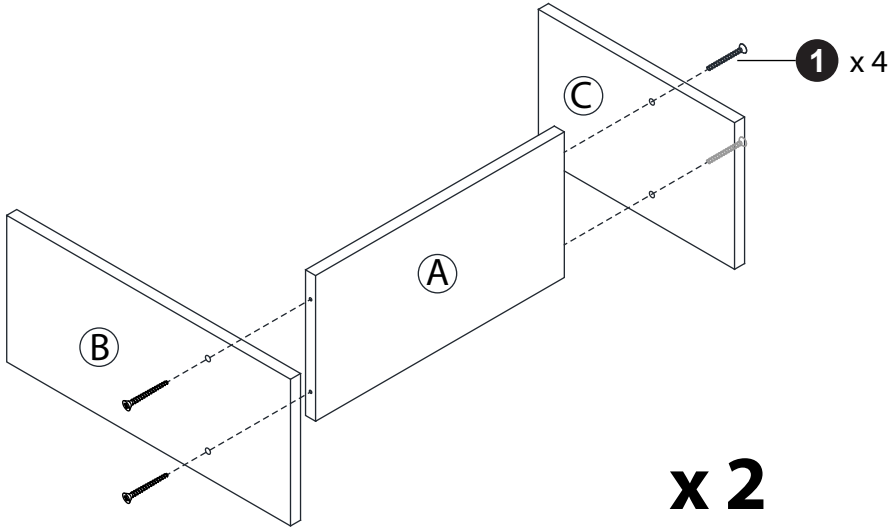

2

