5

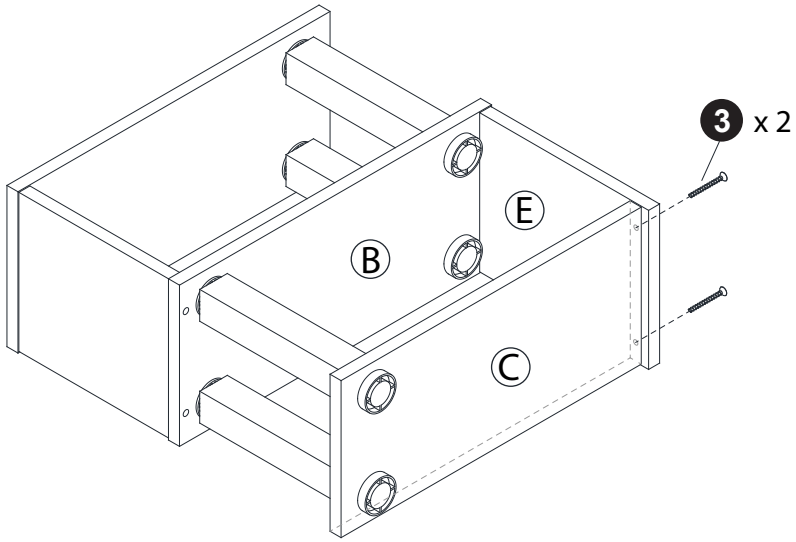

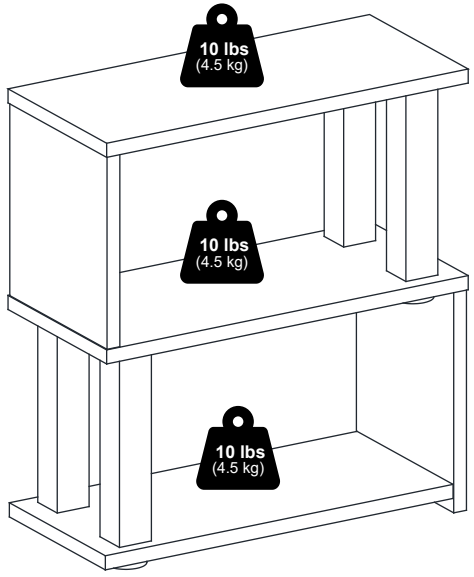

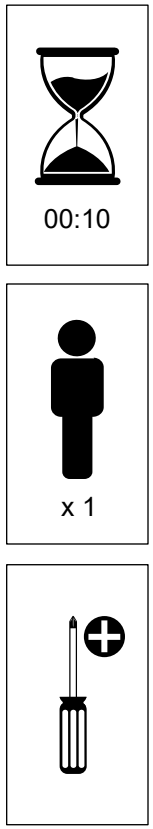

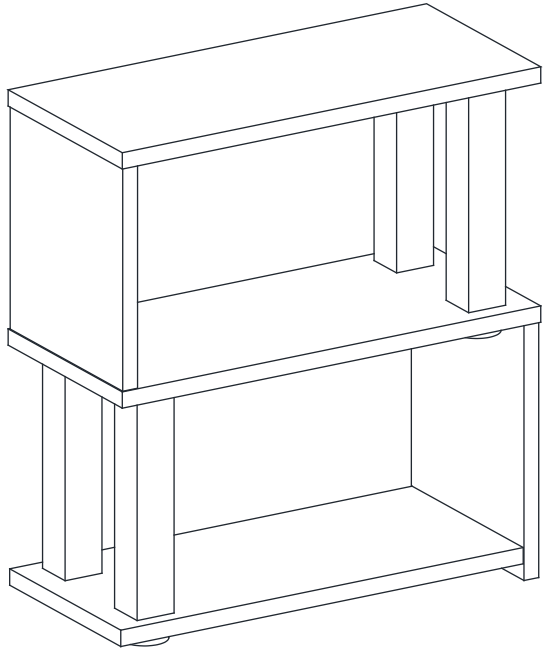

MODEL: 25645

2564520260206

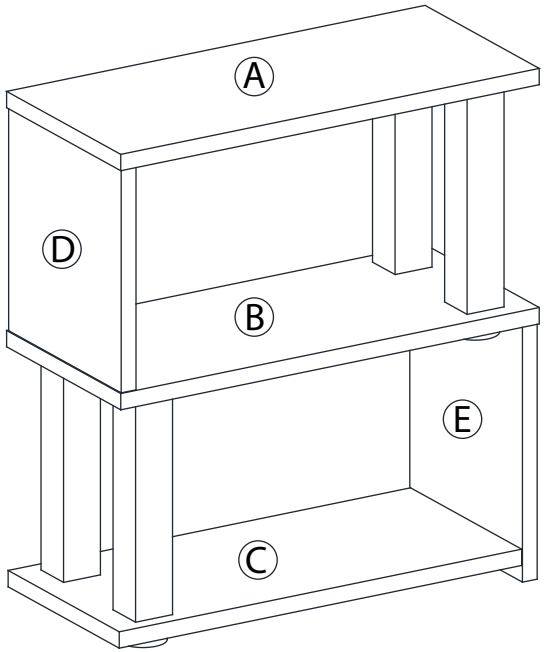

1 x 4	2 x 4	3 x 8
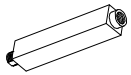		
30 x 162mm	34 x 8mm	M4 x 32mm

1

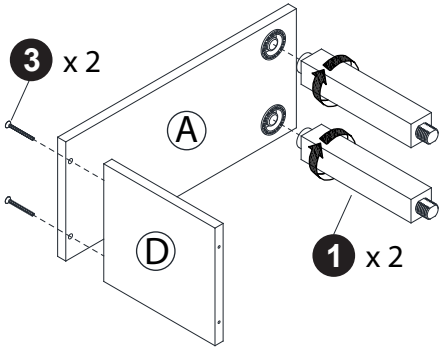

2

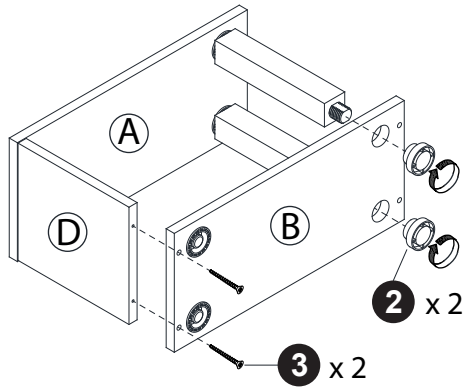

3

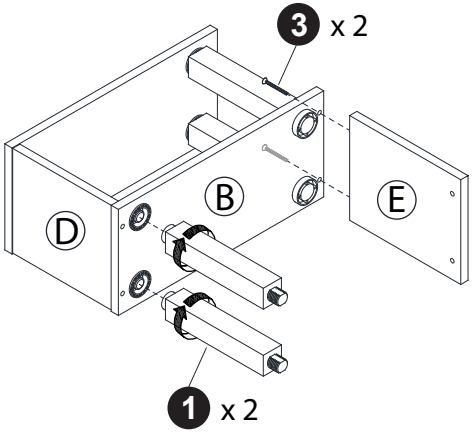

4

