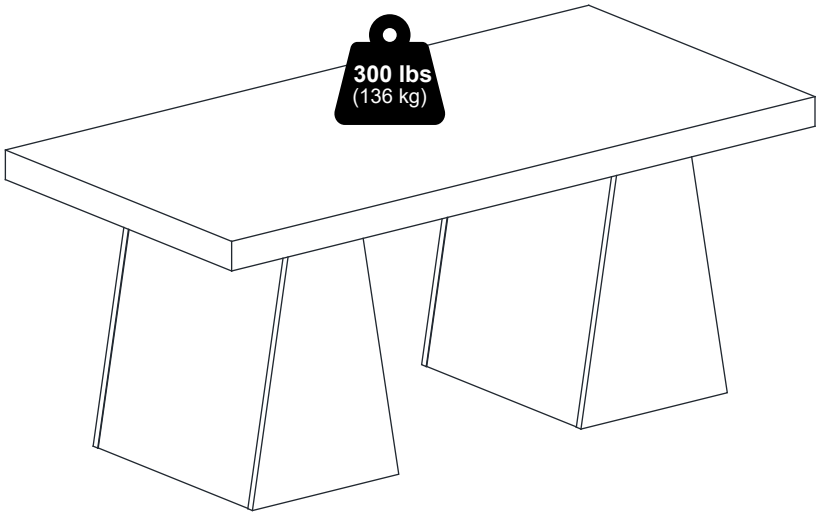







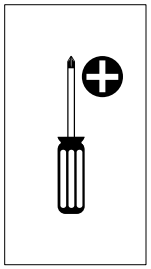

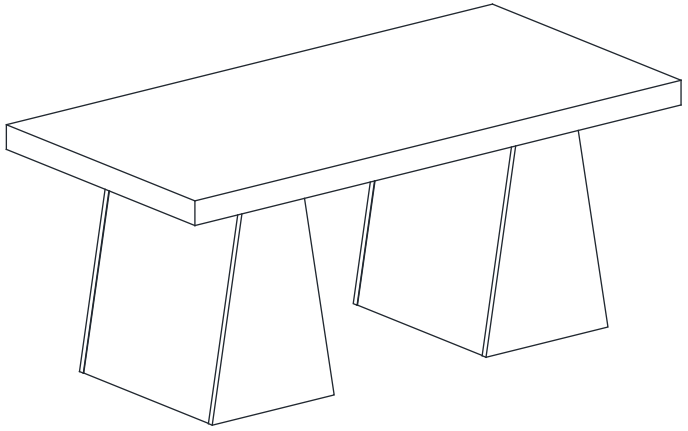

MODEL: 25651

2565120260420

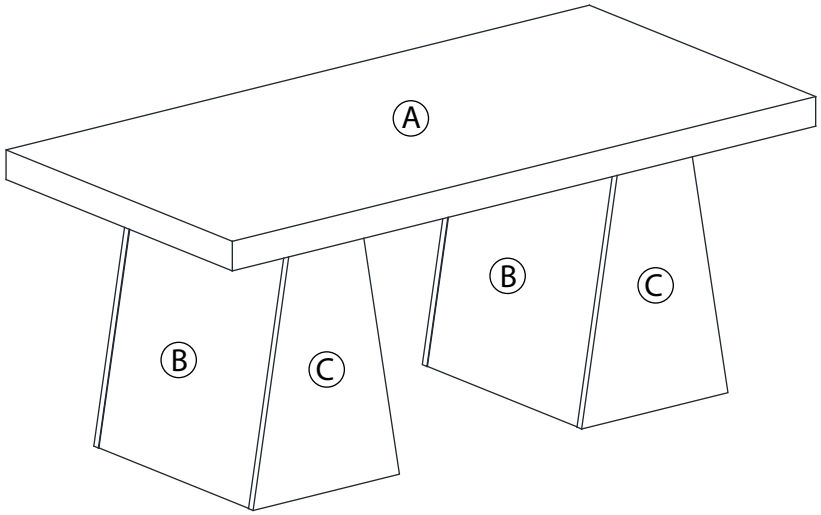

1	2	3	4
x 32	x 32	x 16	x 1
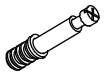		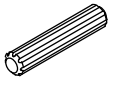	
		M5 x 30mm	M4

5

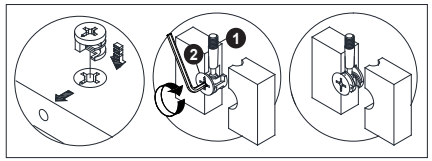

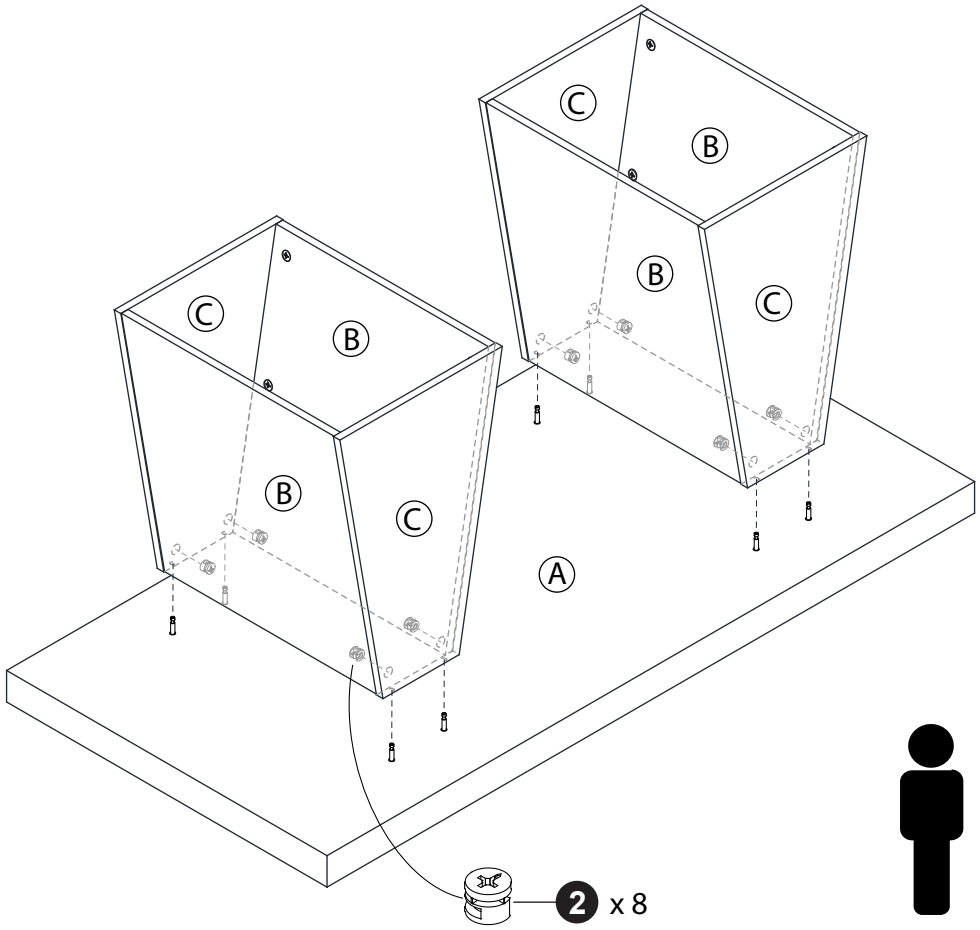

2 x 8

x 2



2 x 8

4

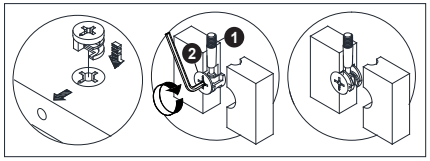

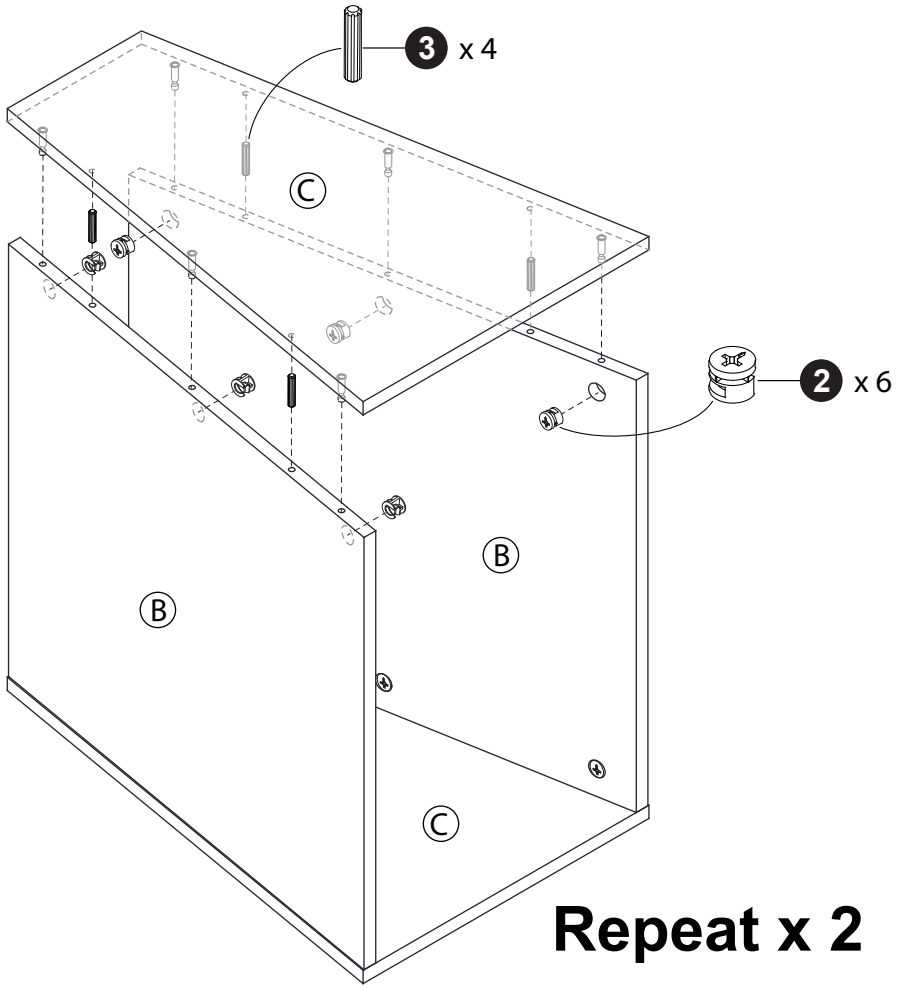

Repeat x 2

2	x 12
3	x 8

1

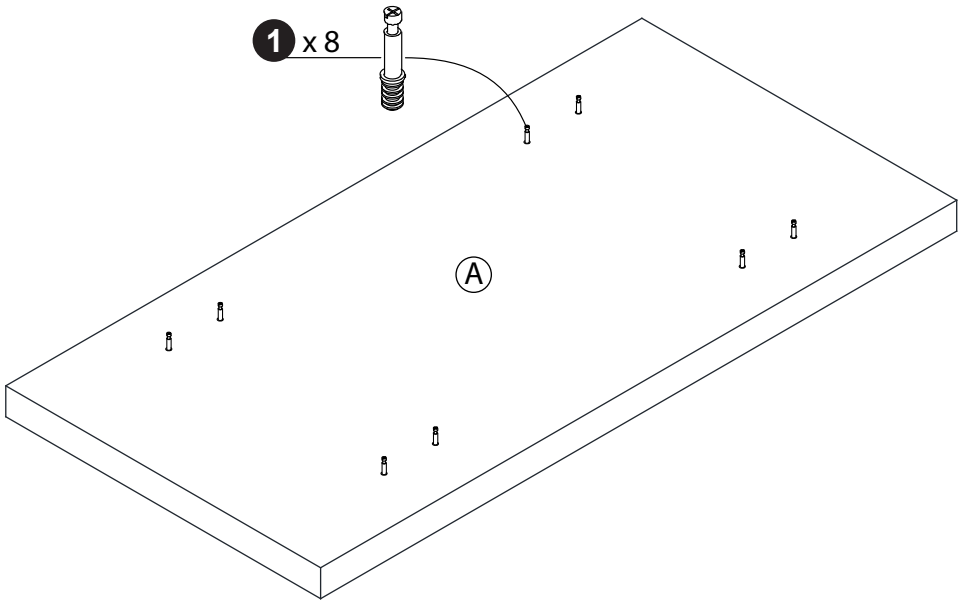

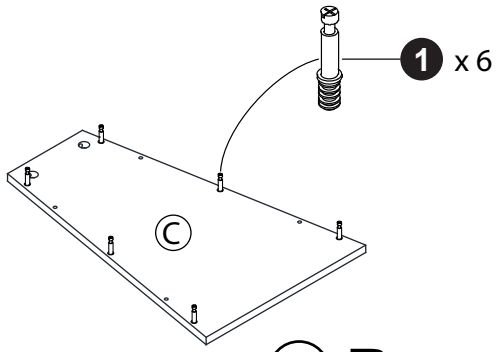

Ⓒ Repeat x 4

1	x 32

2

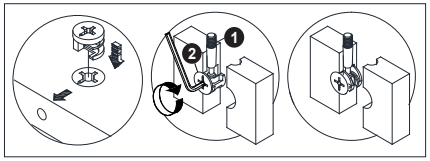

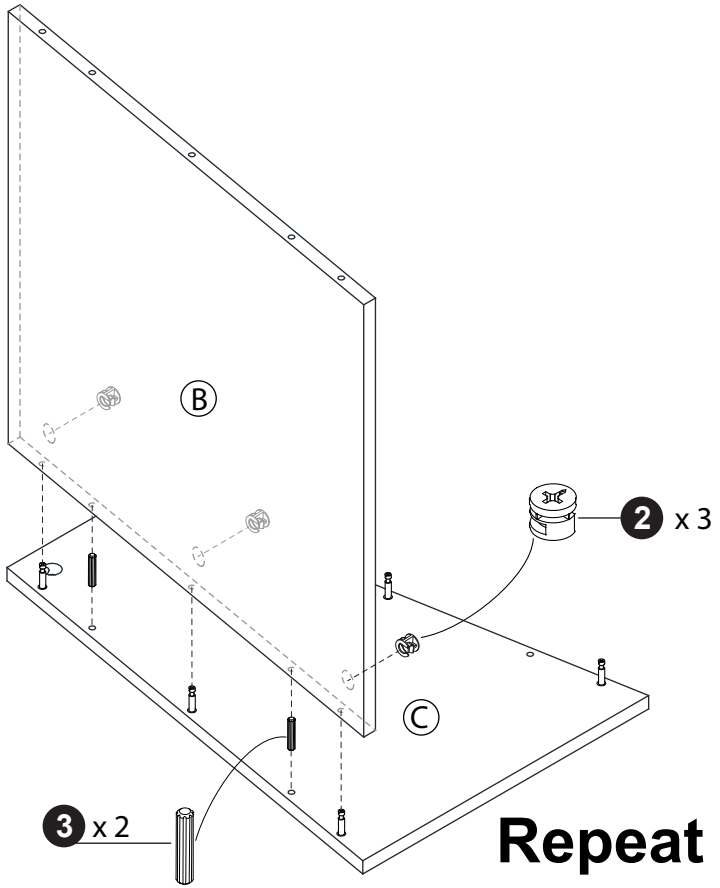

Repeat x 2

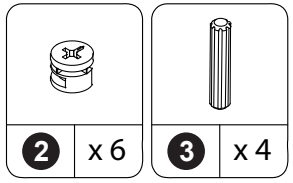

3

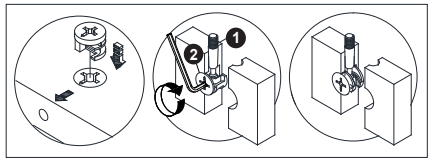

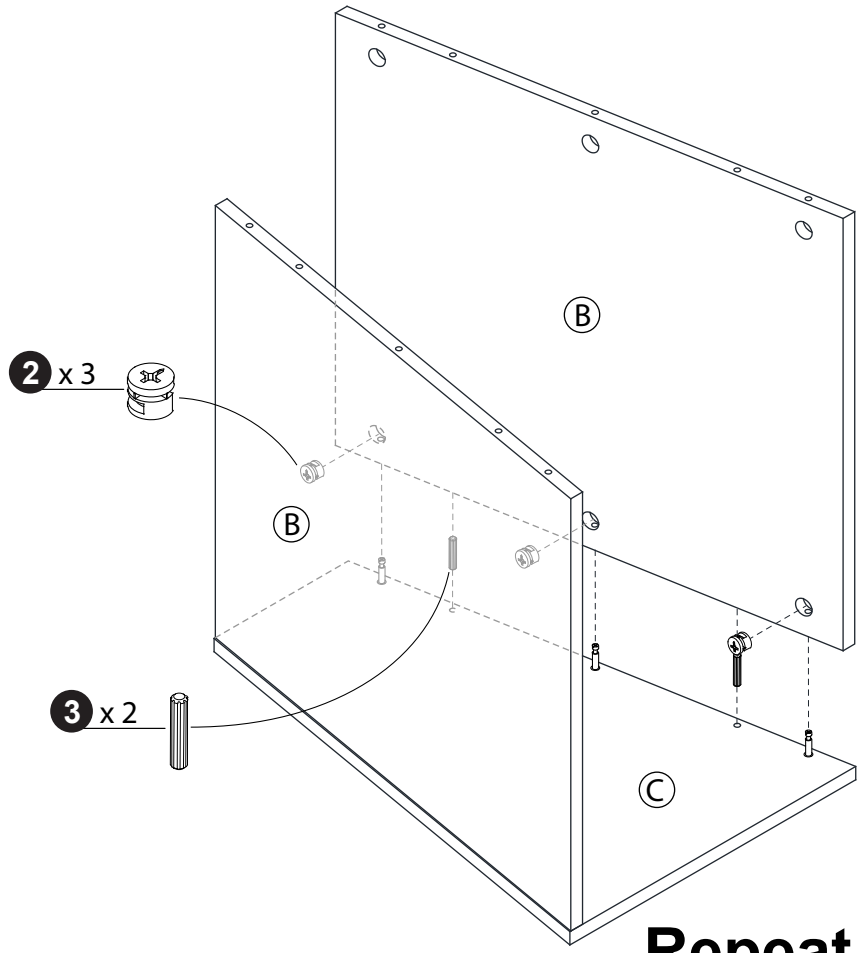

Repeat x 2

