

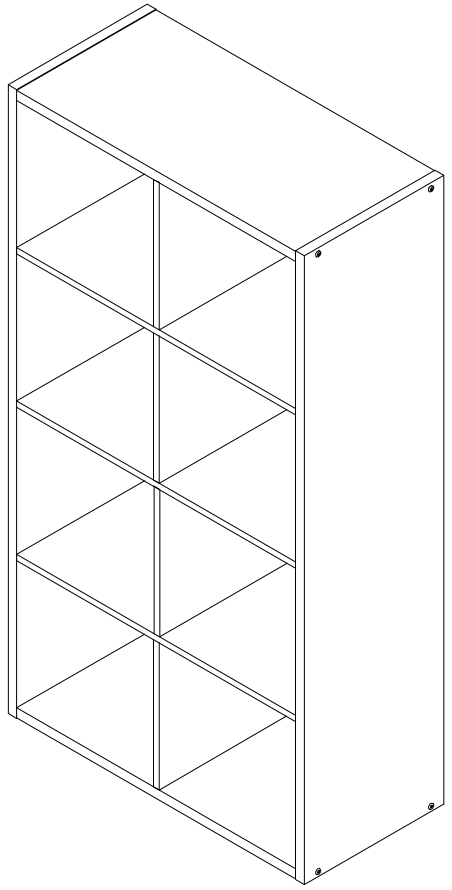



THIS PRODUCT MUST ALWAYS BE MOUNTED A WALL OR STUD FOR USE.

MODEL: 25684

2568420260226

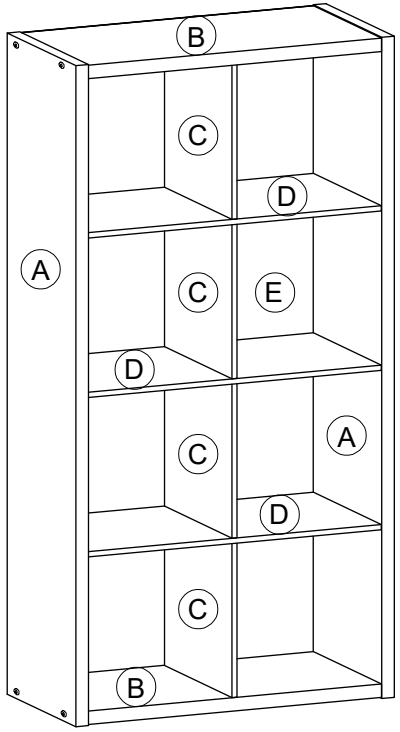

1 x 10 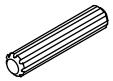 6 x 40mm	**2** x 8  7 x 75mm	**3** x 1 
4 x 12 	**5** x 12 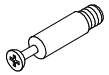	**6** x 2 6a  6b #8 x 1” 6c 4 x 11 mm
7 x 24 	**8** x 1 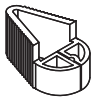	

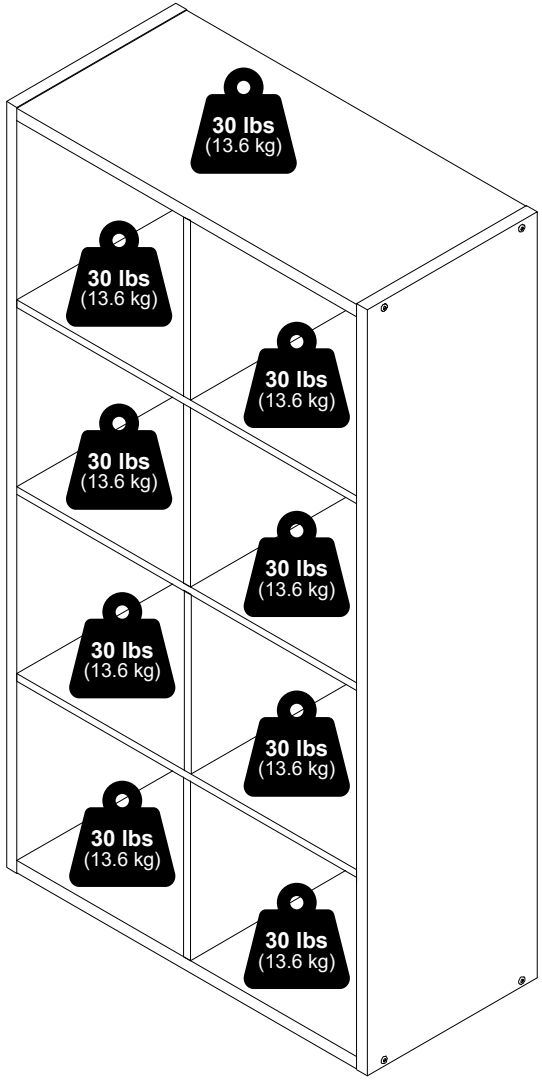

6

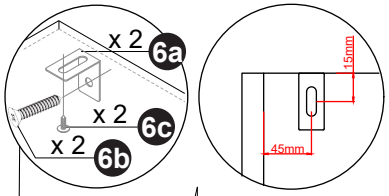
x 2
6a
x 2
6c
x 2
6b

15mm
45mm

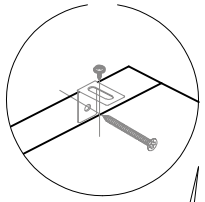

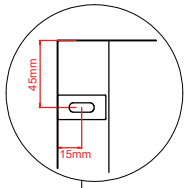
45mm
15mm

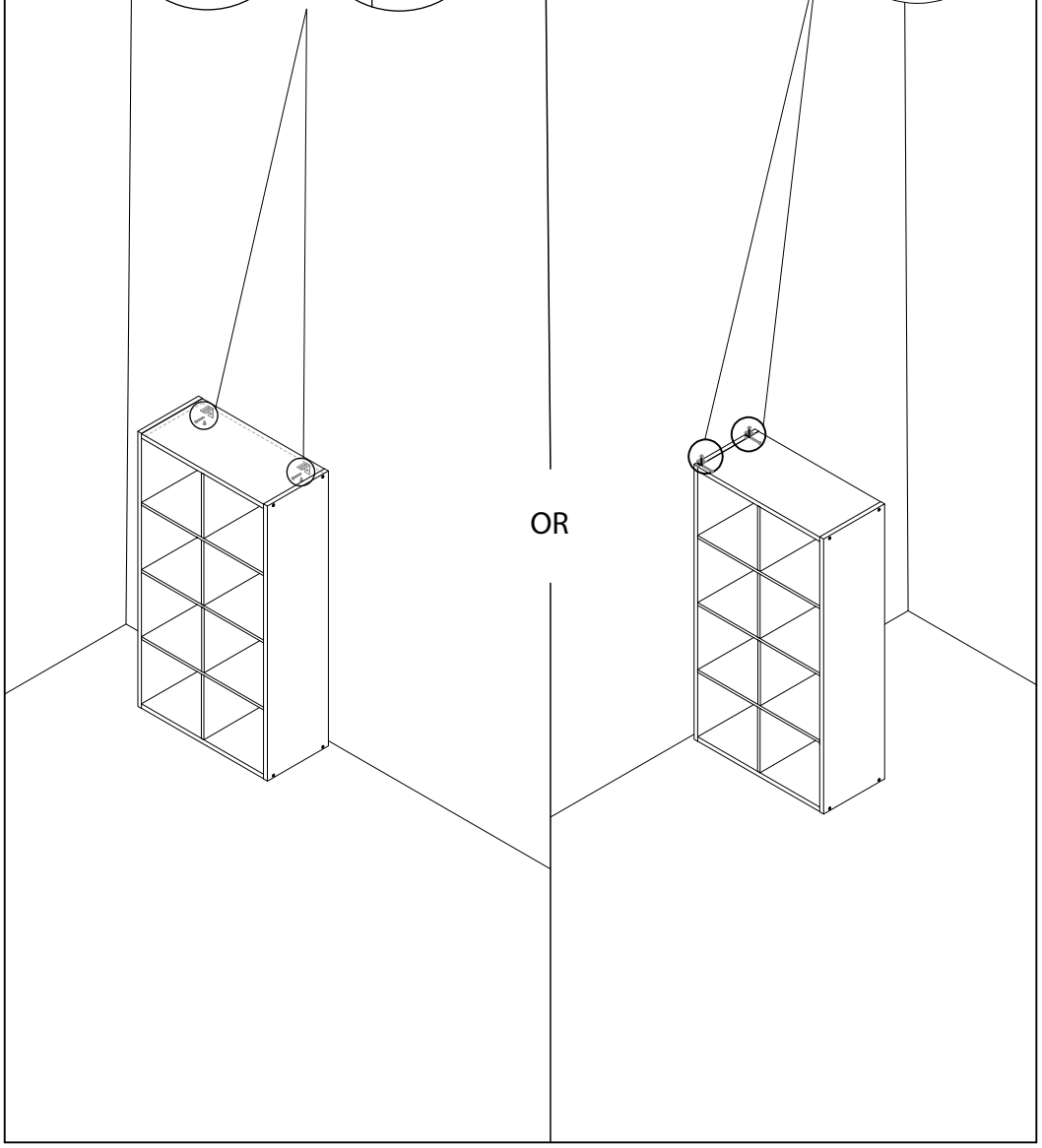

OR

1

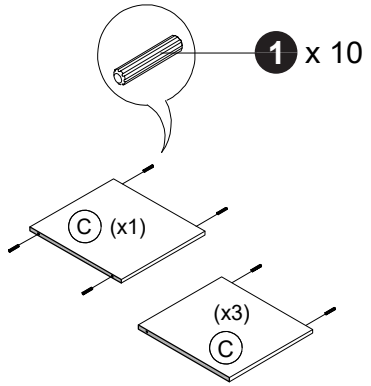
1 x 10
C (x1)
(x3)
C

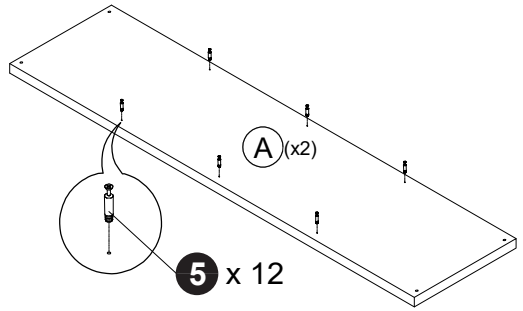
A (x2)
5 x 12

2

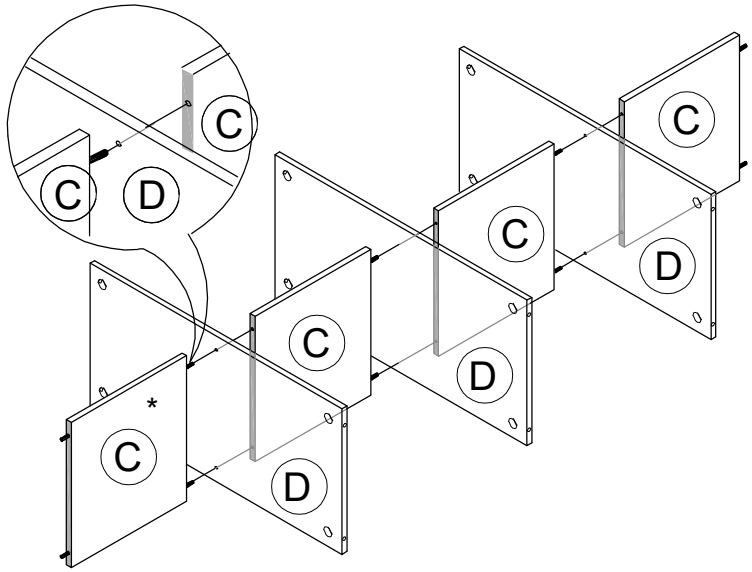
C
C
D
C
C
D
C
D
*
C
D

3

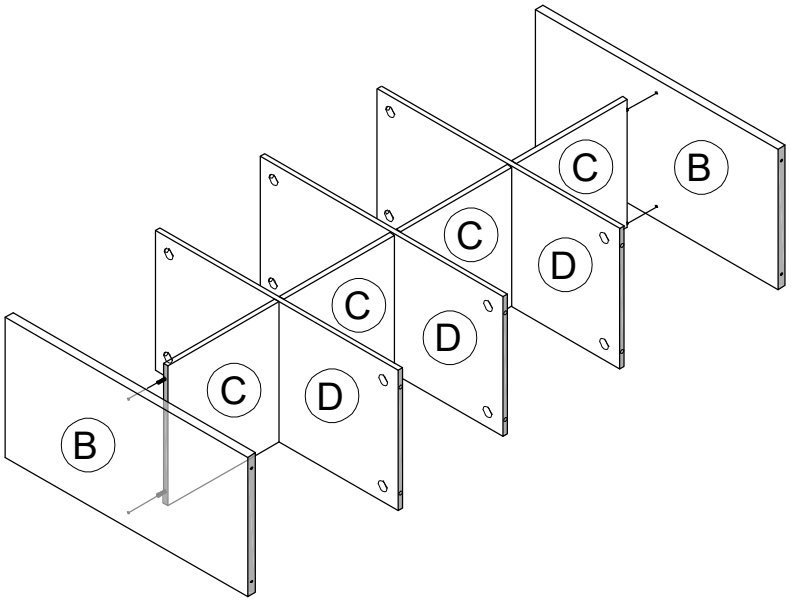

4

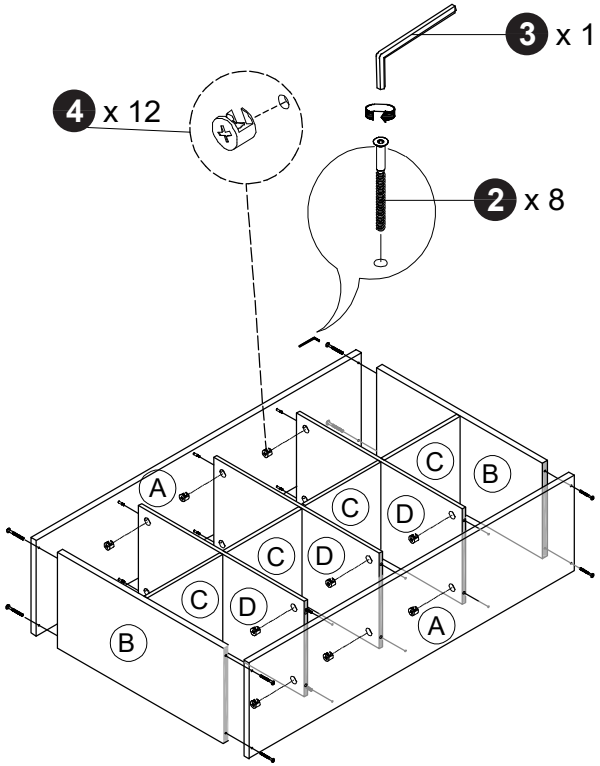

5

