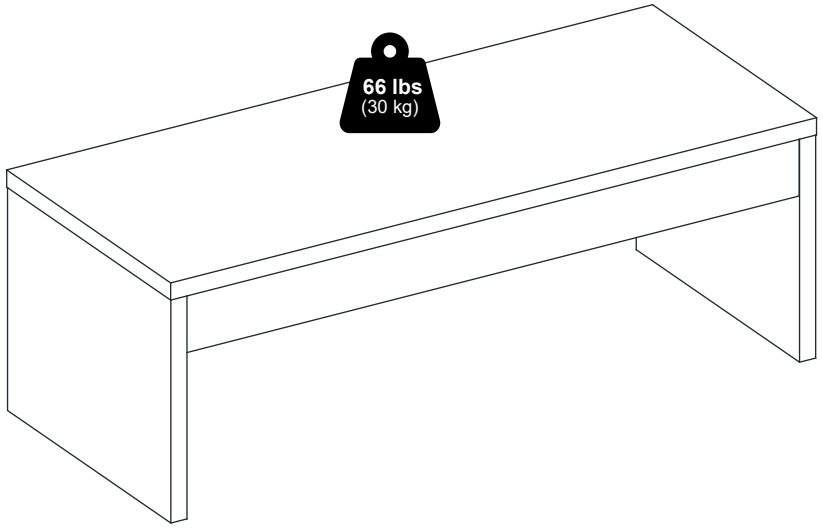

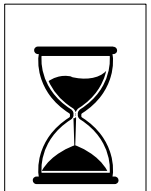



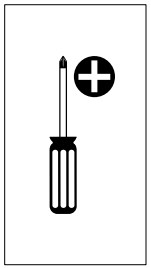

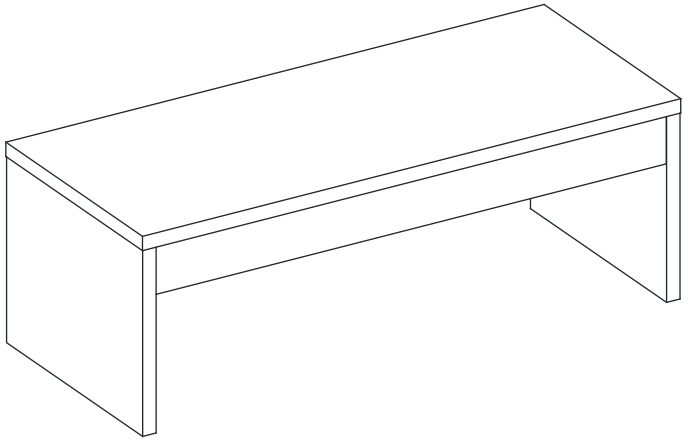

MODEL: 25692

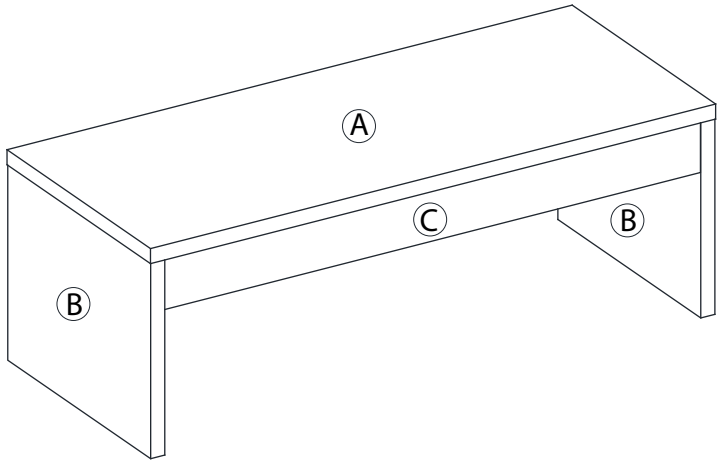

1	2	3
x 14	x 14	x 12
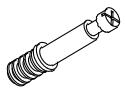		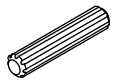
		M5 x 30mm

5

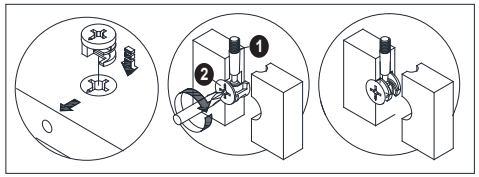

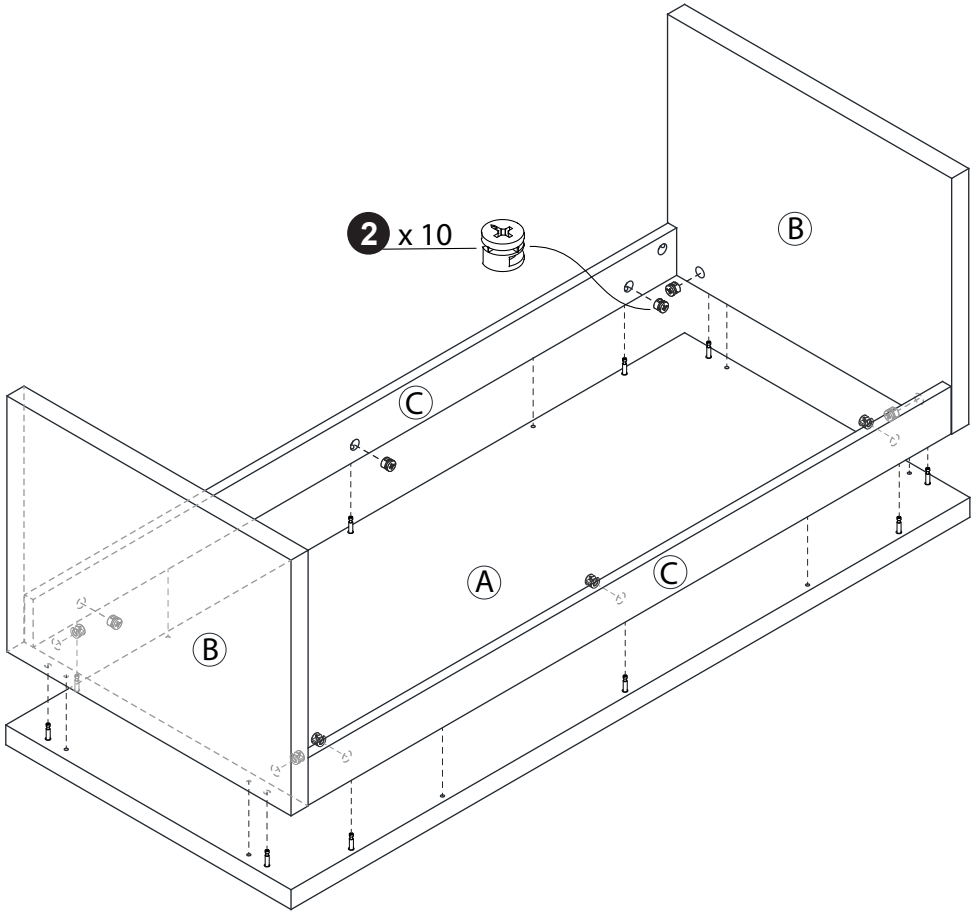

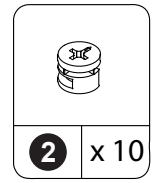

4

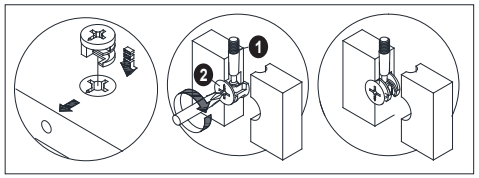

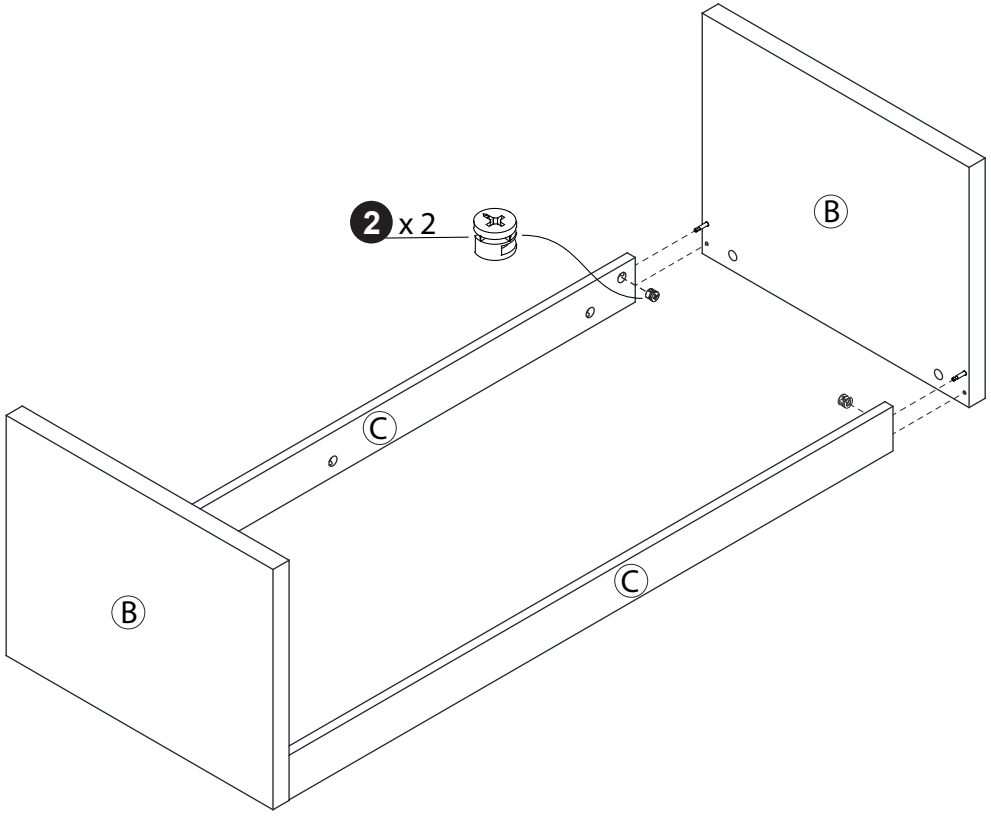

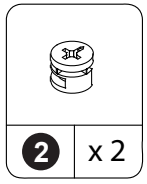

1

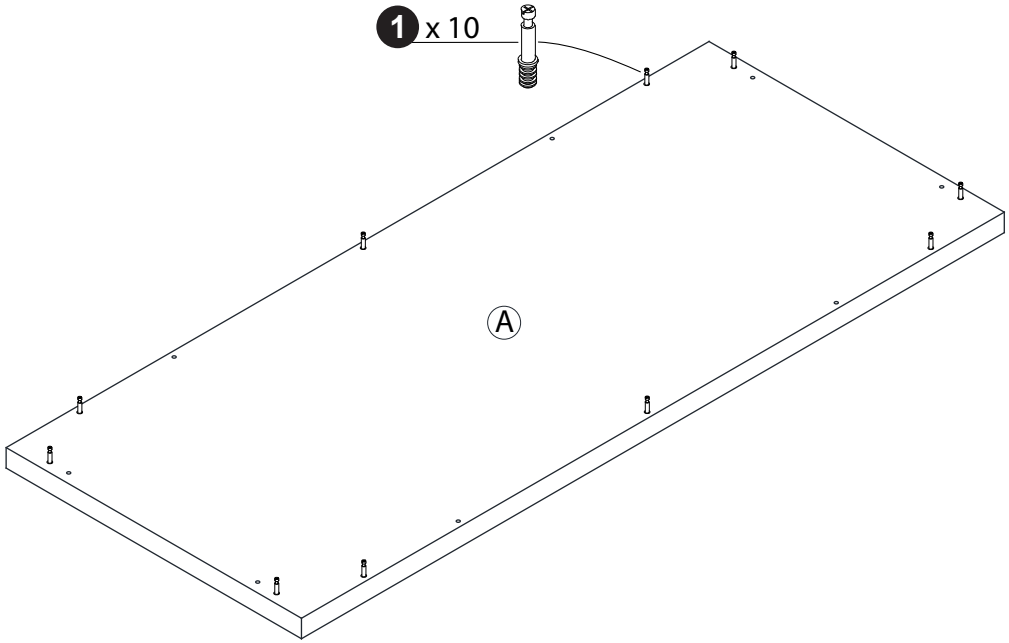

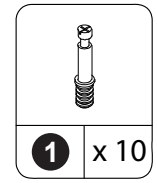

2

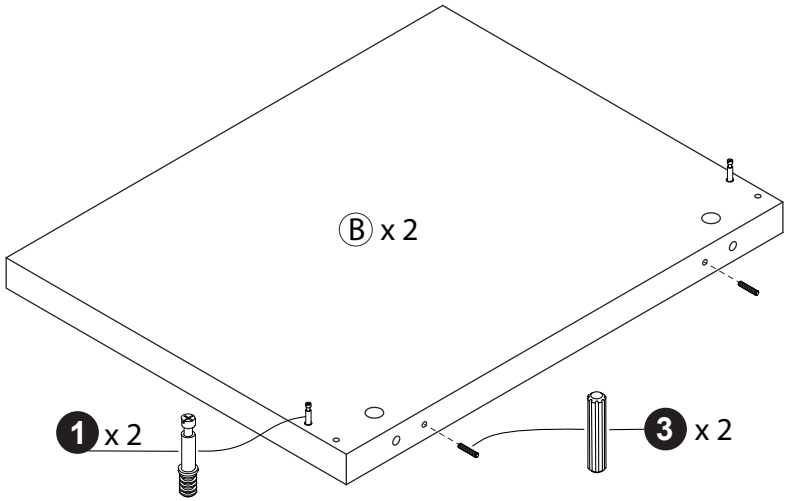

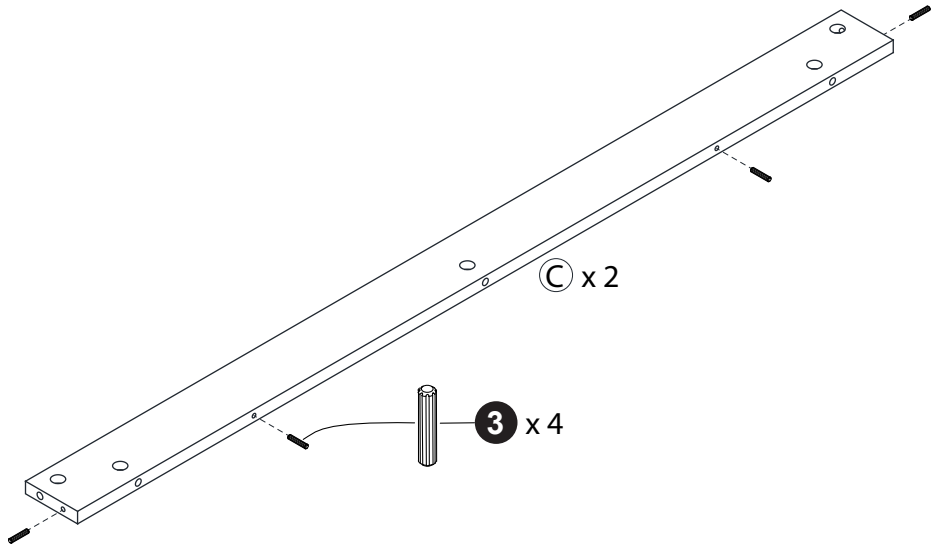

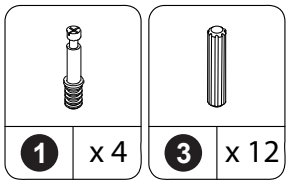

3

