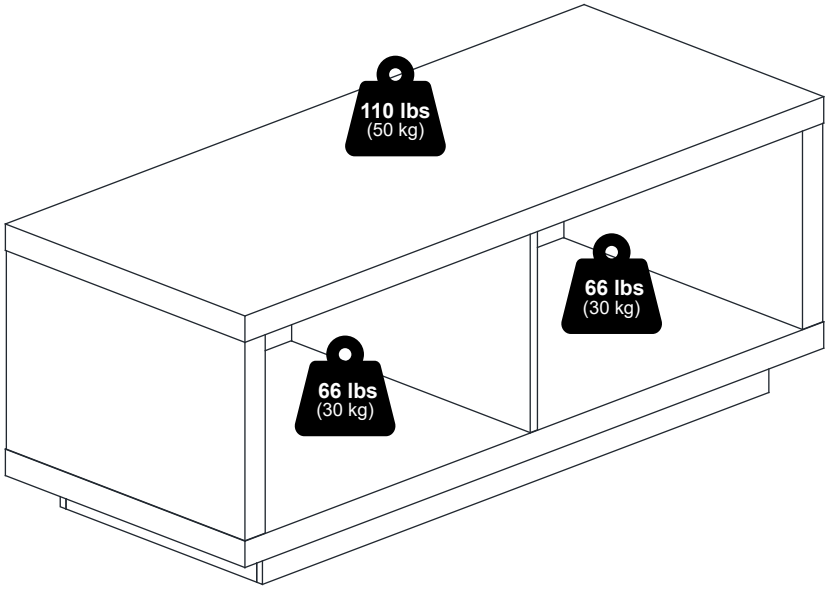





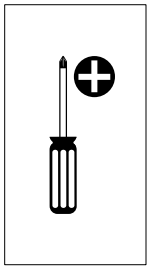

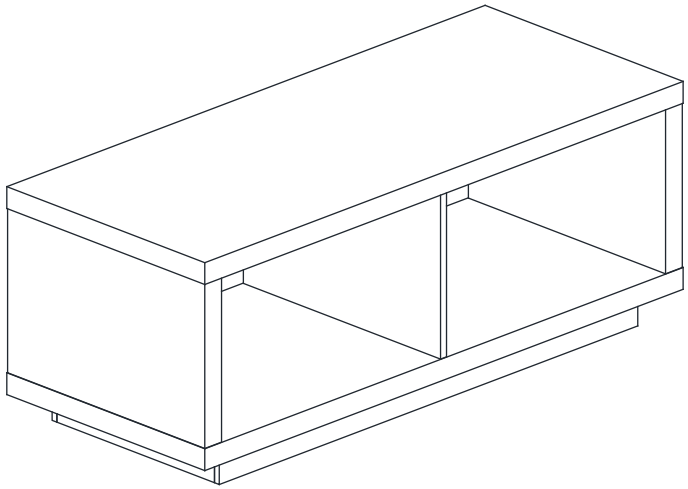

MODEL: 25693

2569320260618

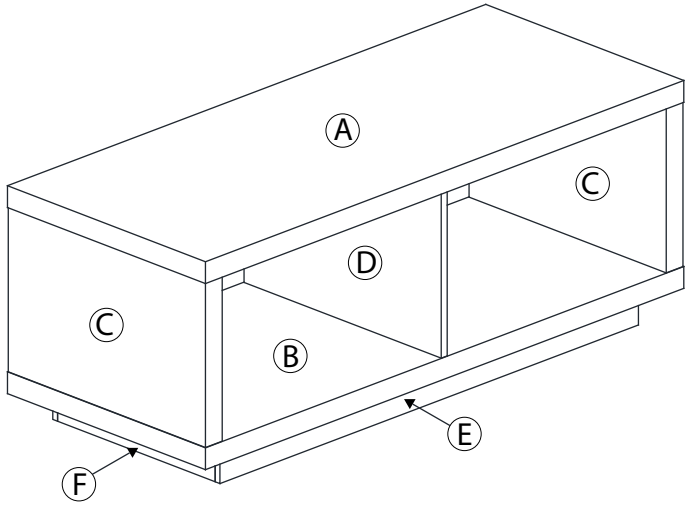

1 x 20 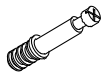	2 x 20 	3 x 8 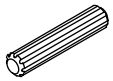 M8 x 50mm	4 x 4 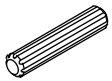 M5 x 30mm
5 x 2  M4 x 60mm	6 x 6 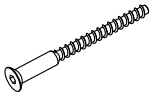 M7 x 75mm	7 x 1 	8 x 6 

6

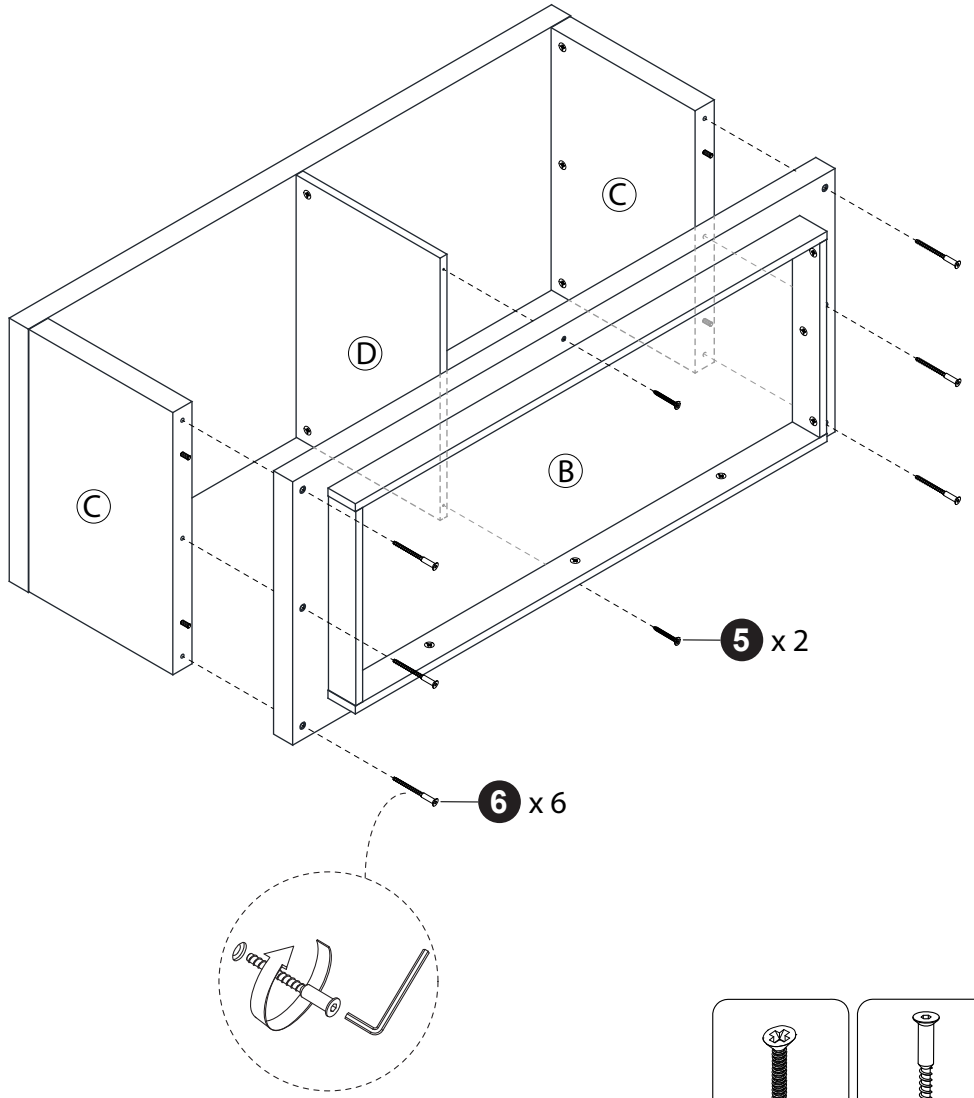

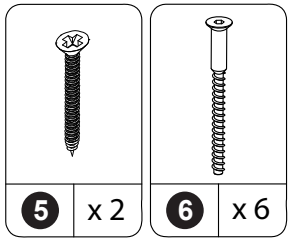

5

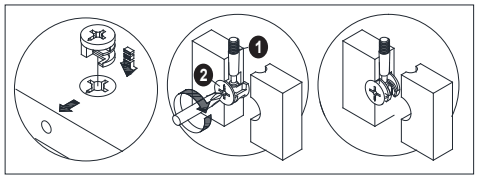

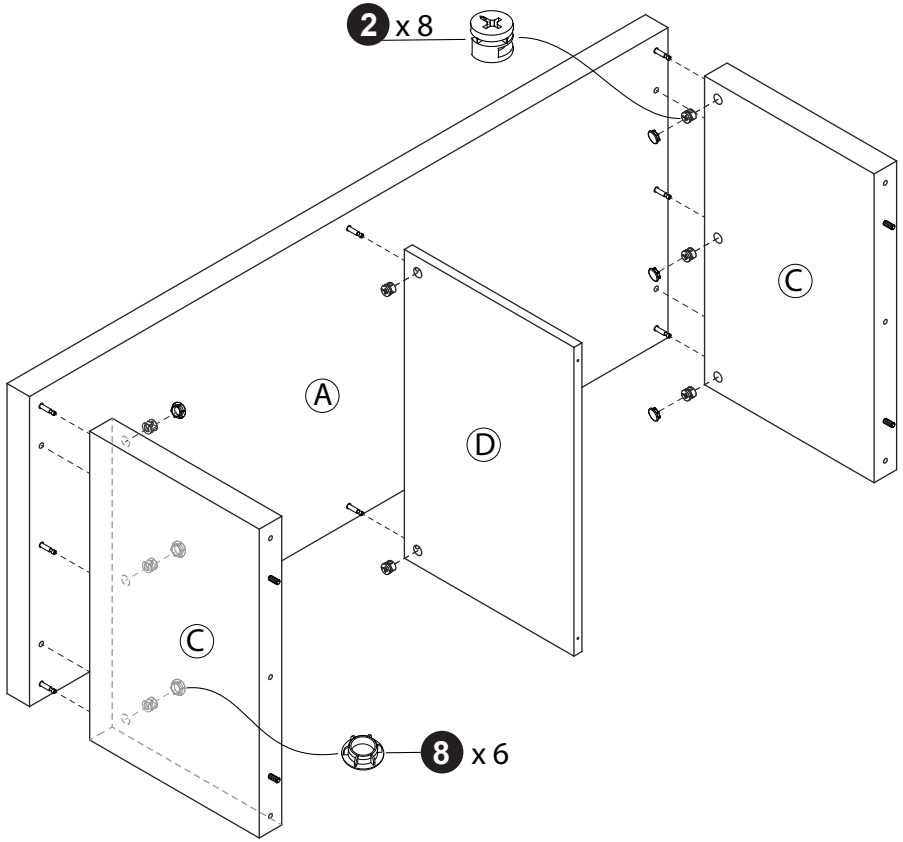

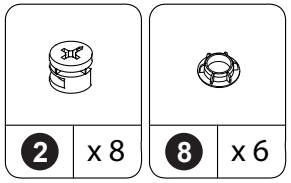

1

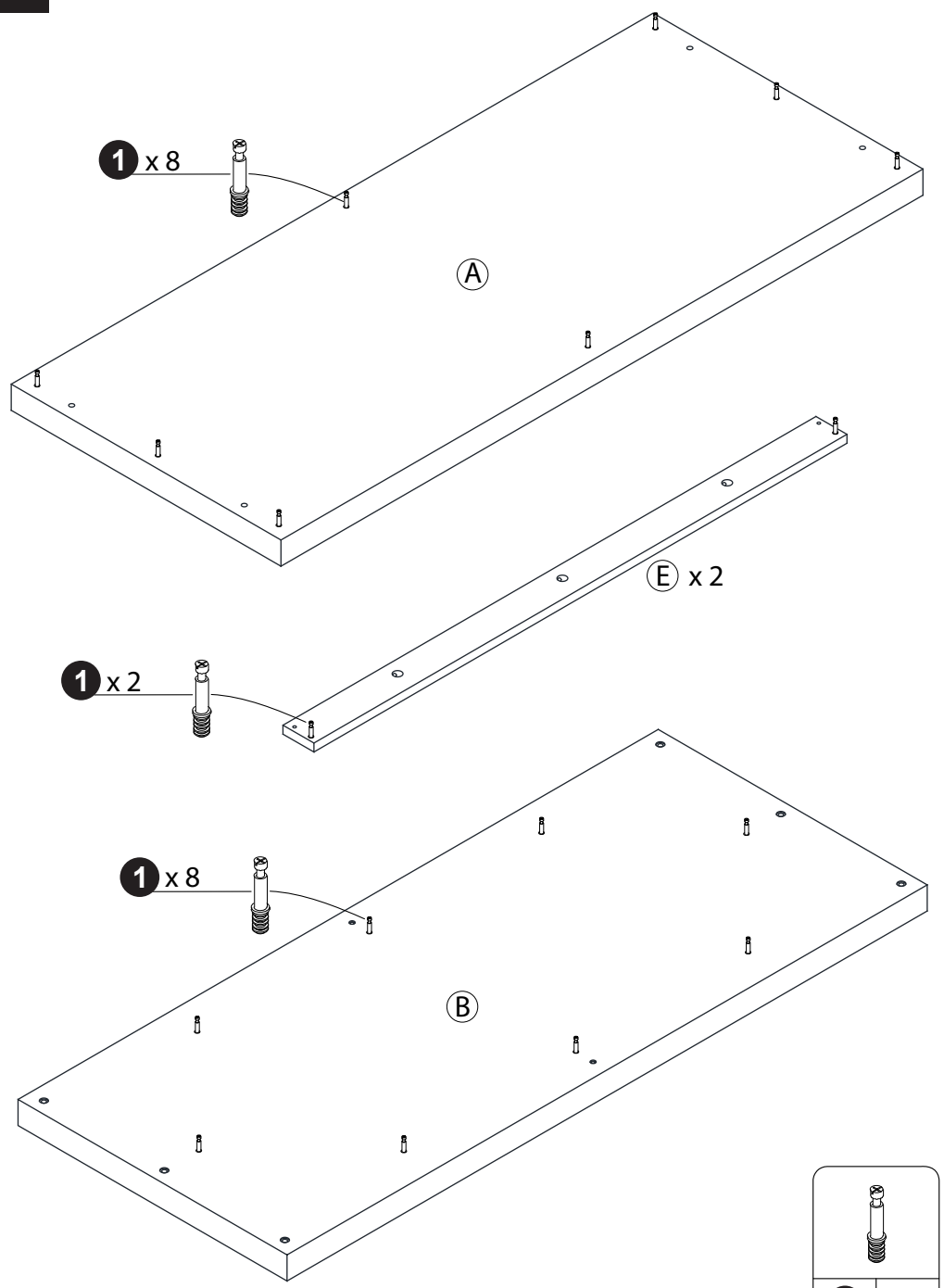

2

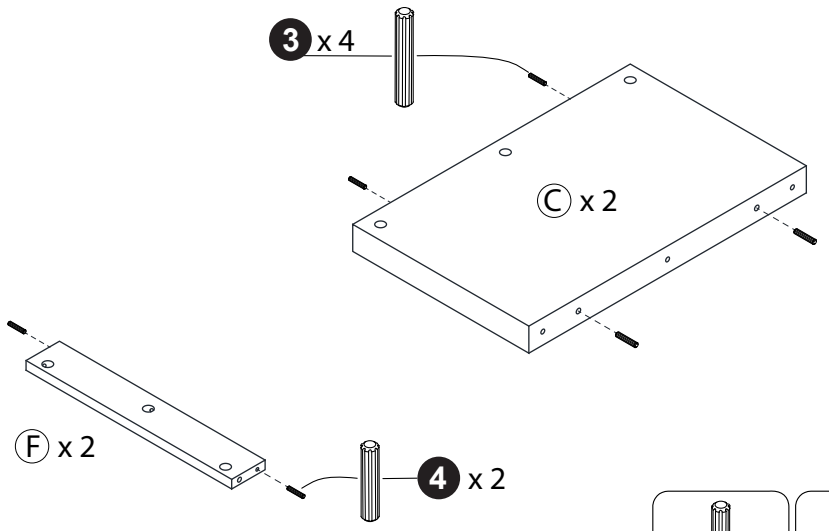

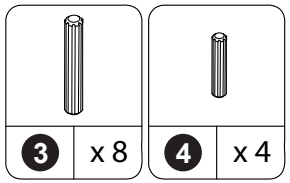

3

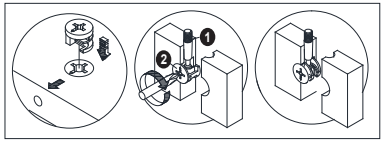

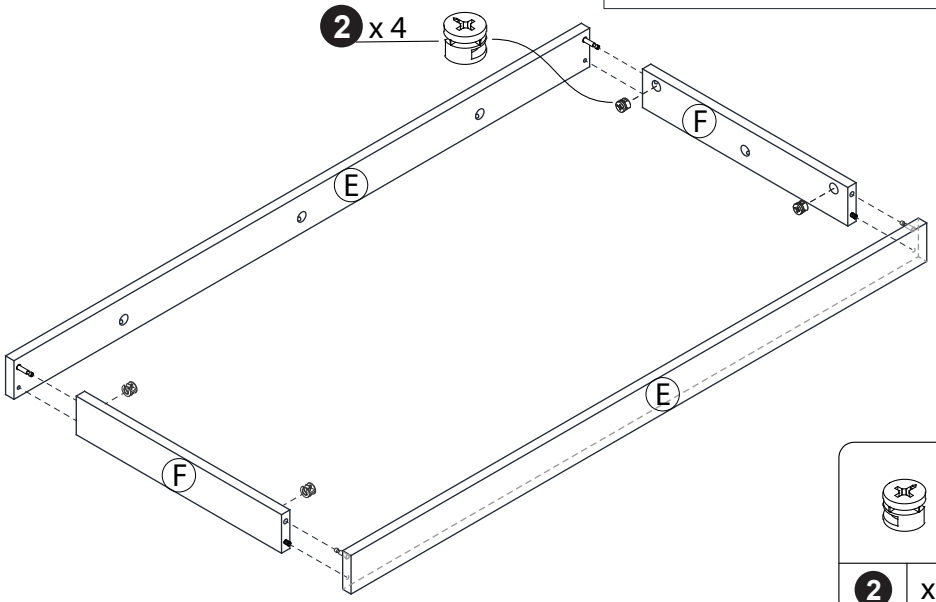

4

