9

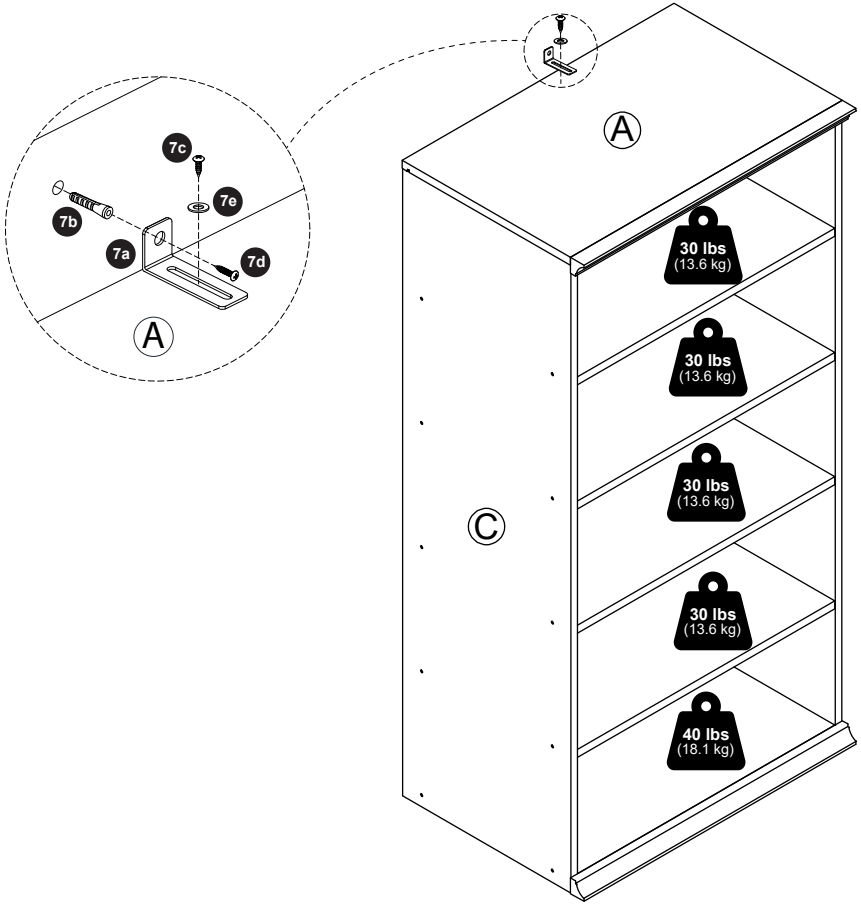

THIS PRODUCT MUST ALWAYS BE MOUNTED A WALL OR STUD FOR USE.

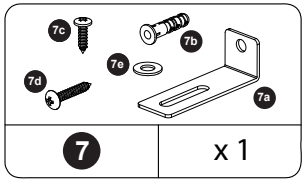





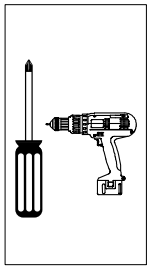

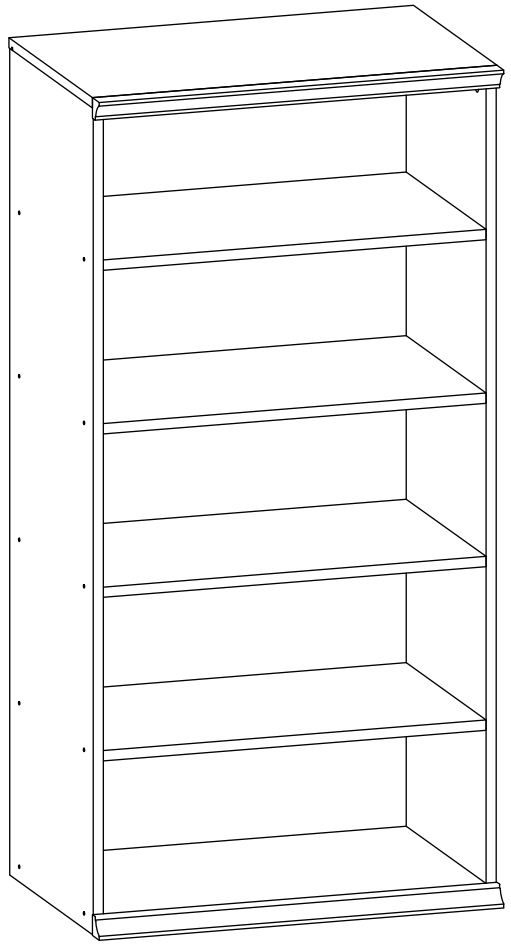

THIS PRODUCT MUST ALWAYS BE MOUNTED A WALL OR STUD FOR USE.

MODEL: 25694

2569420261022

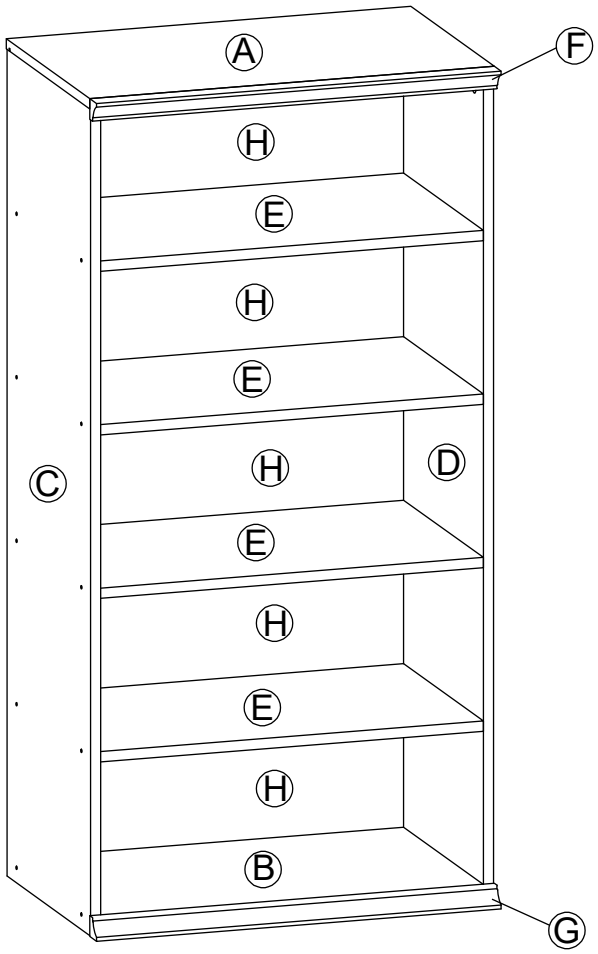

1 x 8	2 x 8	3 x 28	4 x 20
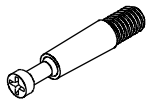		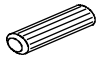 M5 x 30mm	 M4 x 38mm
5 x 8	6 x 8	7 x 1	
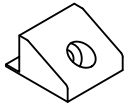	 M3 x 16mm	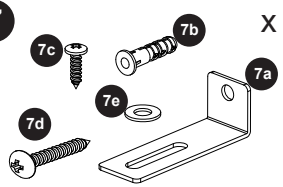	

8

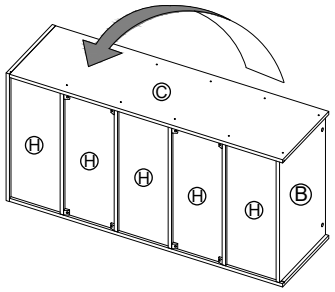

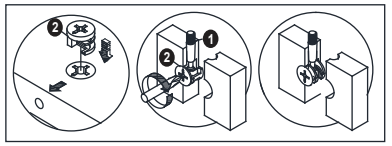

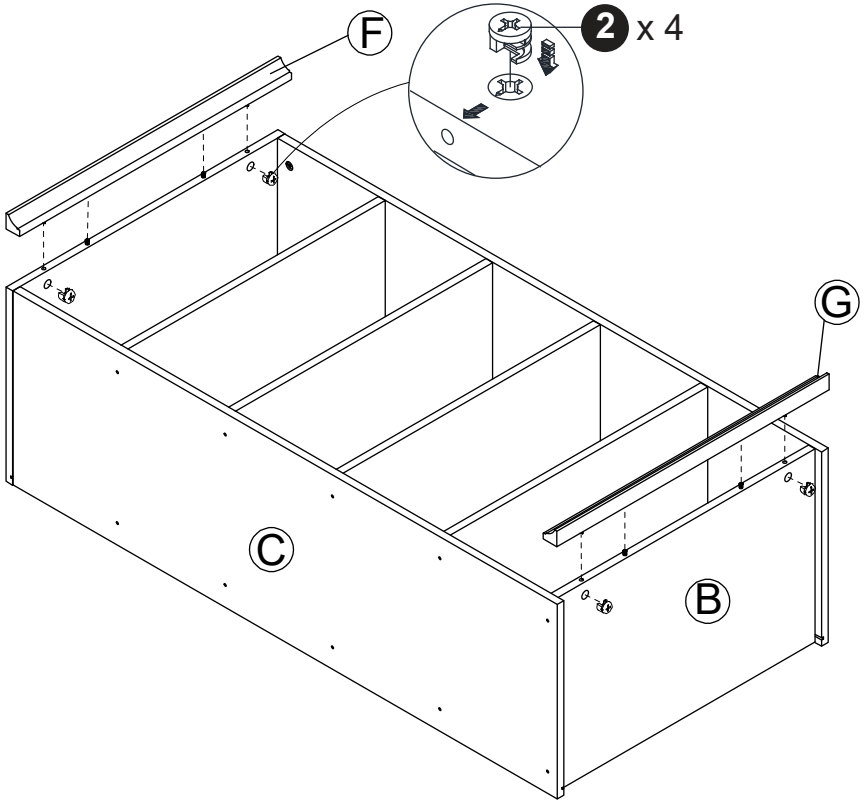

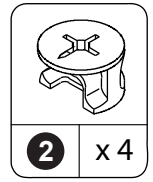

6

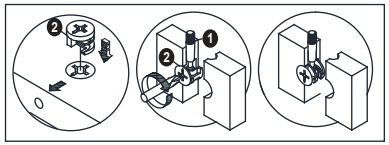

C
E
E
E
E
E
A
2 x 4

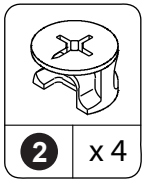
2 x 4

7

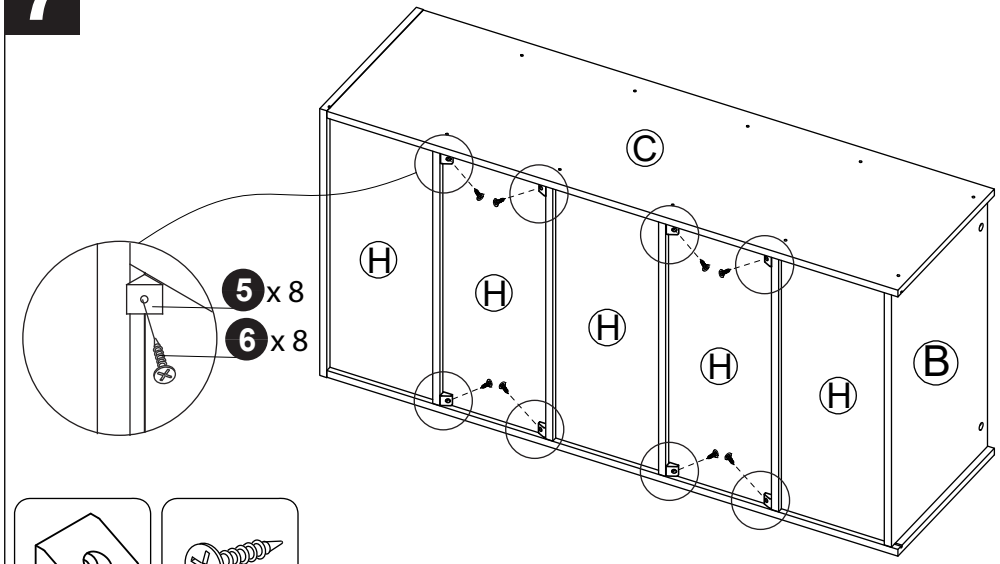
C
H
H
H
H
H
B
5 x 8
6 x 8

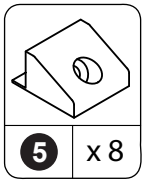
5 x 8

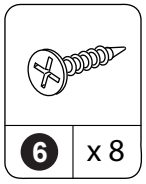
6 x 8

1

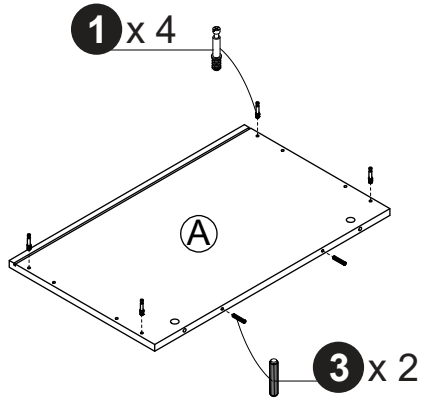
1 x 4
A
3 x 2

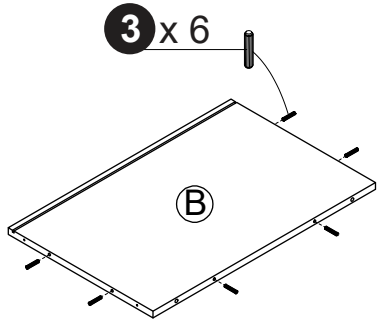
3 x 6
B

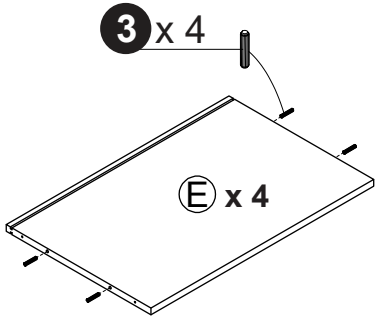
3 x 4
E x 4

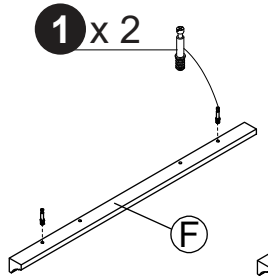
1 x 2
F

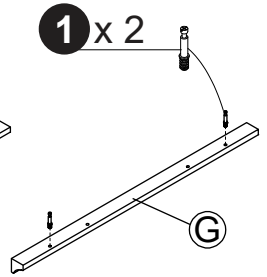
1 x 2
G

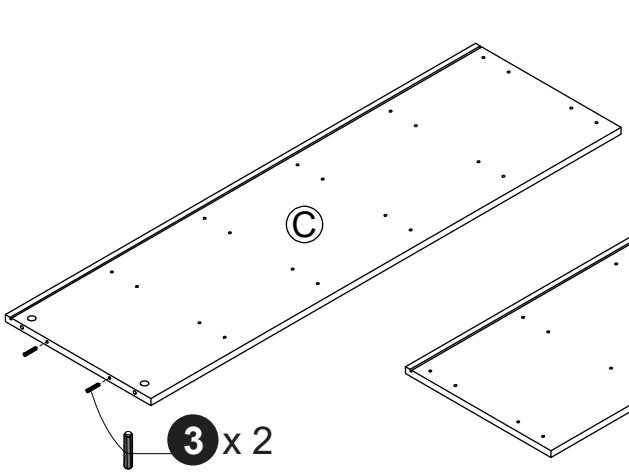
C
3 x 2

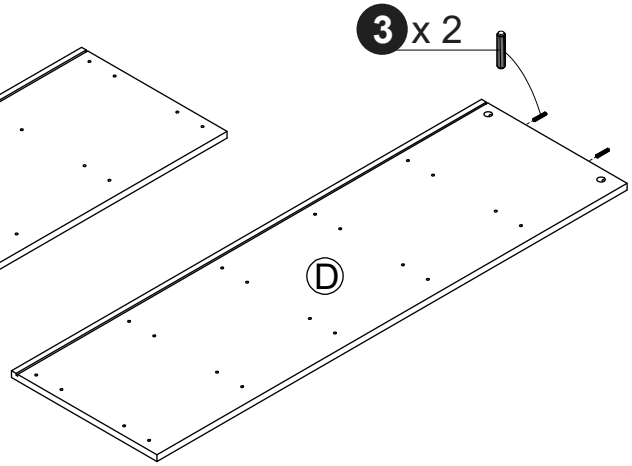
3 x 2
D

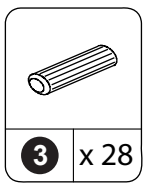
3 x 28

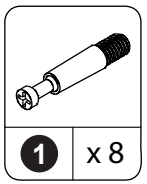
1 x 8

2

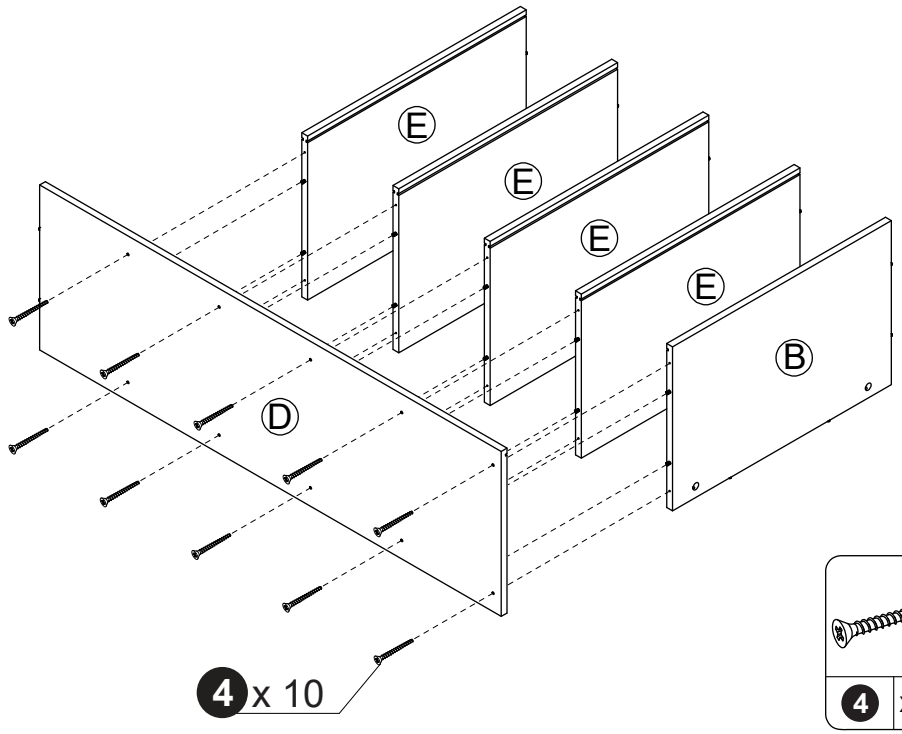

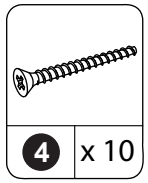

3

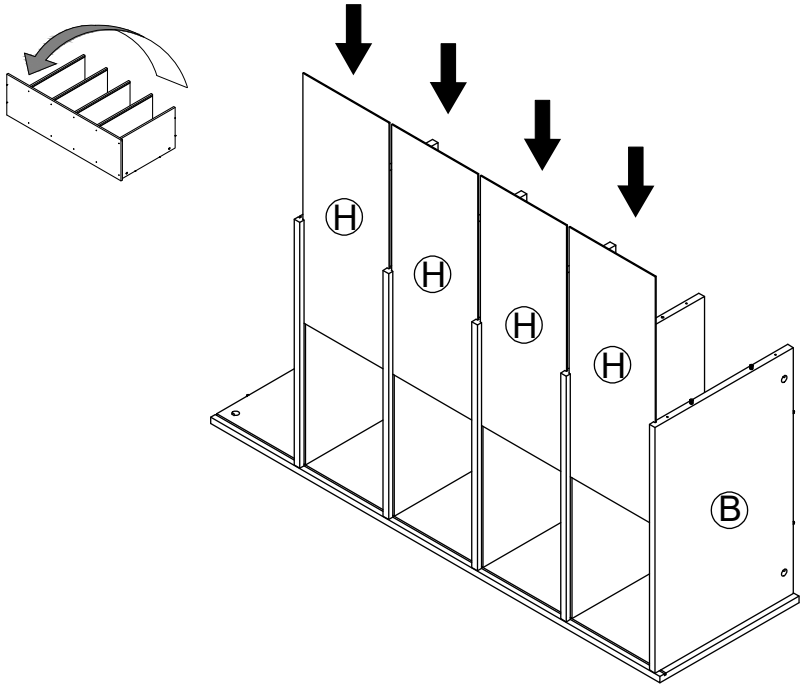

4

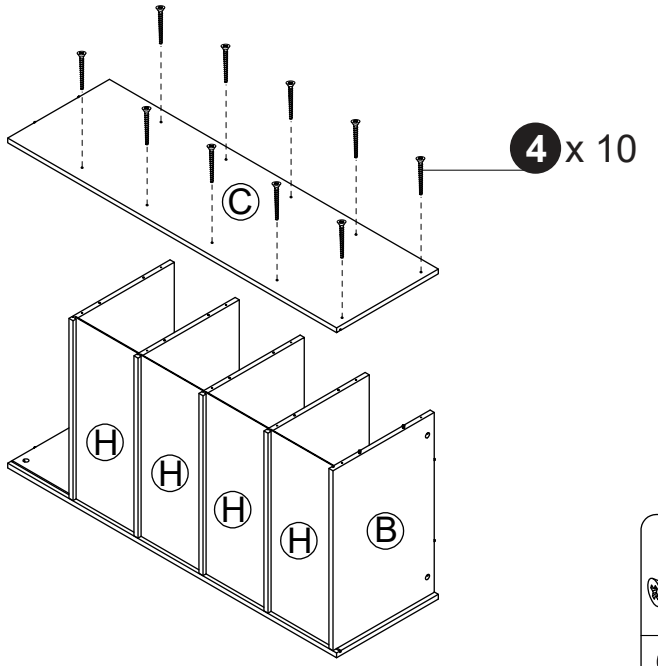

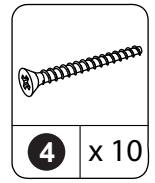

5

