11

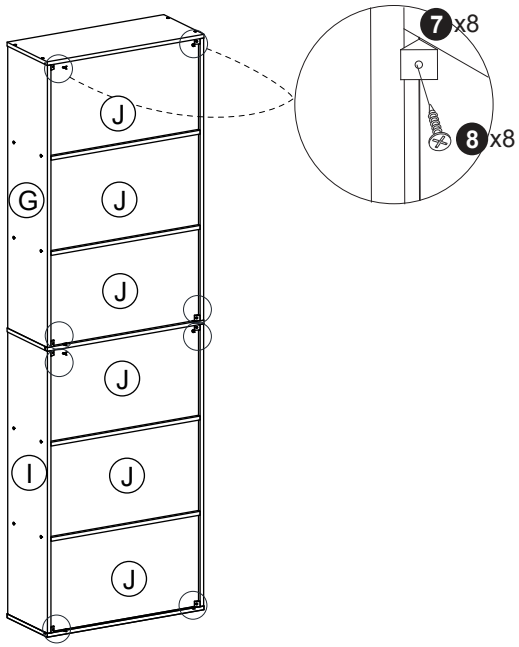

12

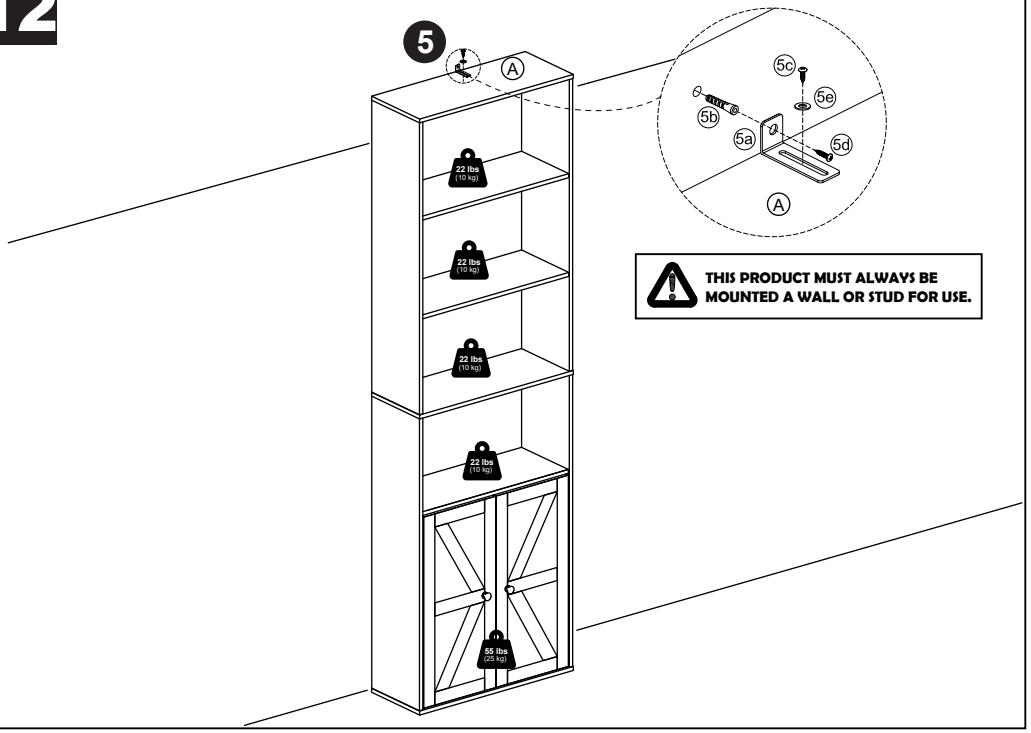

THIS PRODUCT MUST ALWAYS BE MOUNTED A WALL OR STUD FOR USE.

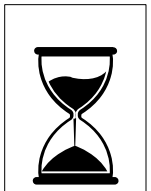



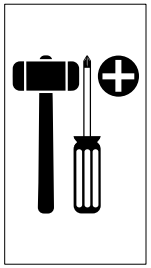

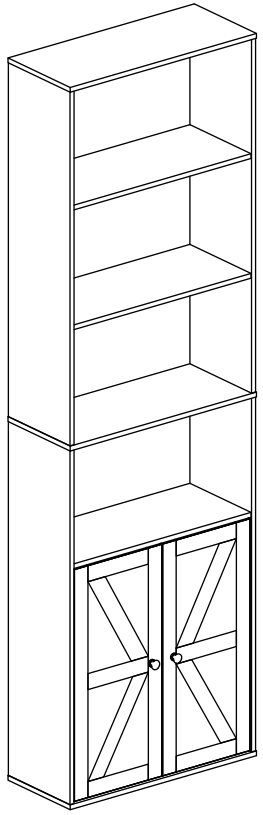

THIS PRODUCT MUST ALWAYS BE MOUNTED A WALL OR STUD FOR USE.

MODEL: 26003

2600320260407

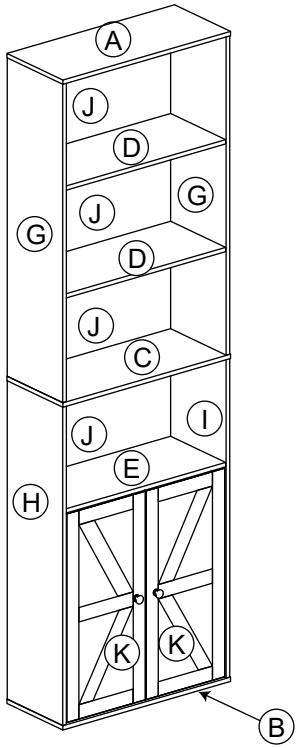

1 x 4 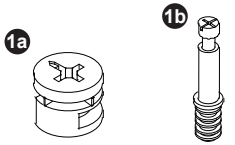	**2** x 28  M4 x 38mm	**3** x 4 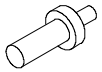
4 x 2 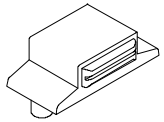	**5** x 1 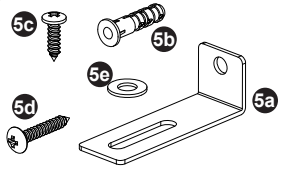	**6** x 2  M5 x 6mm
7 x 8 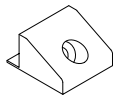	**8** x 8  M3.5 x 12mm	**9** x 2 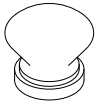
10 x 2  M4 x 25mm		

9

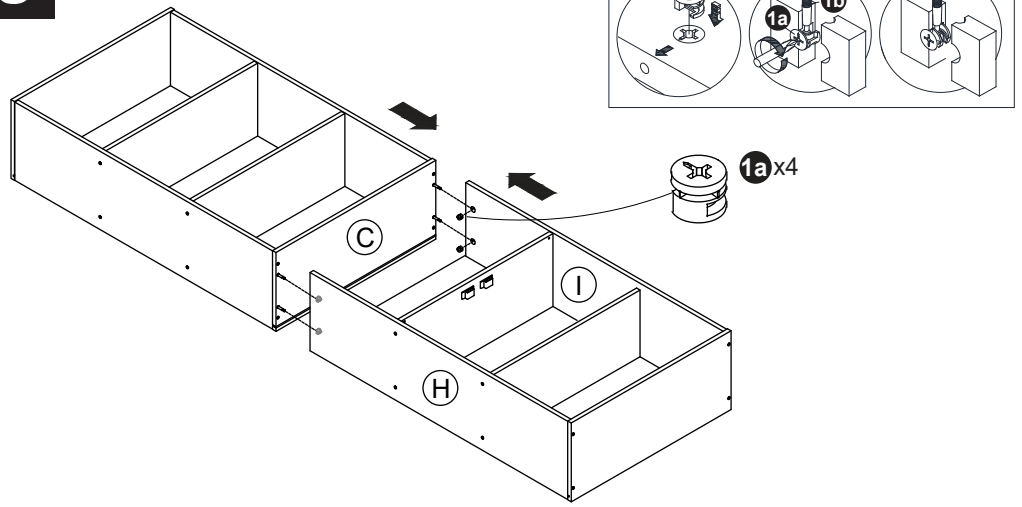

10

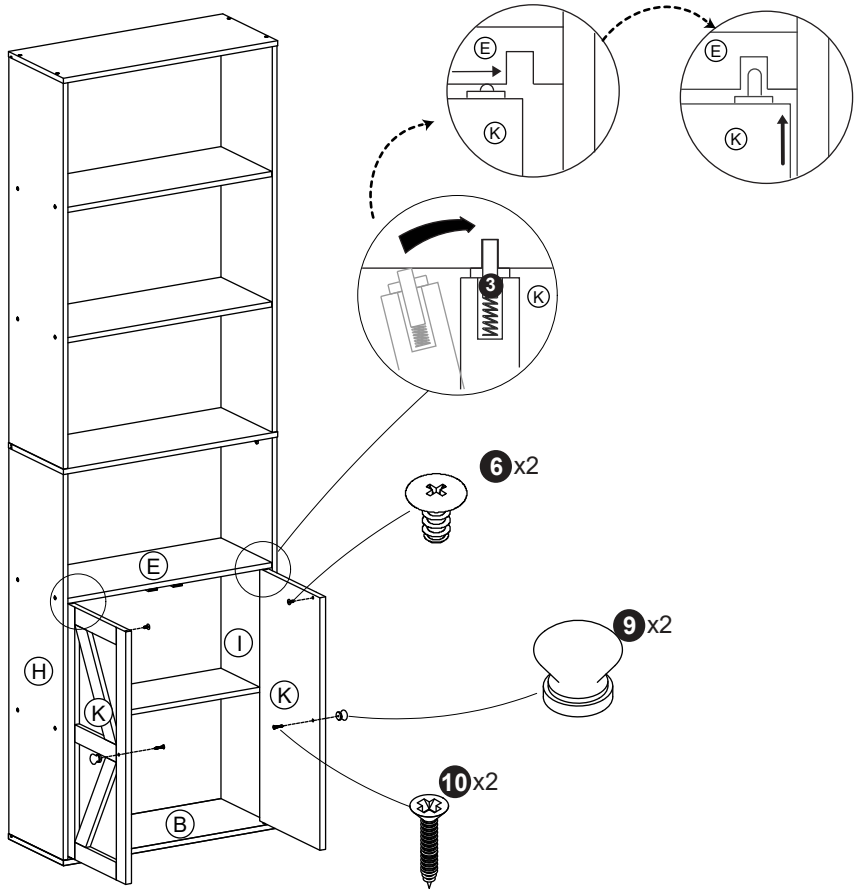

7

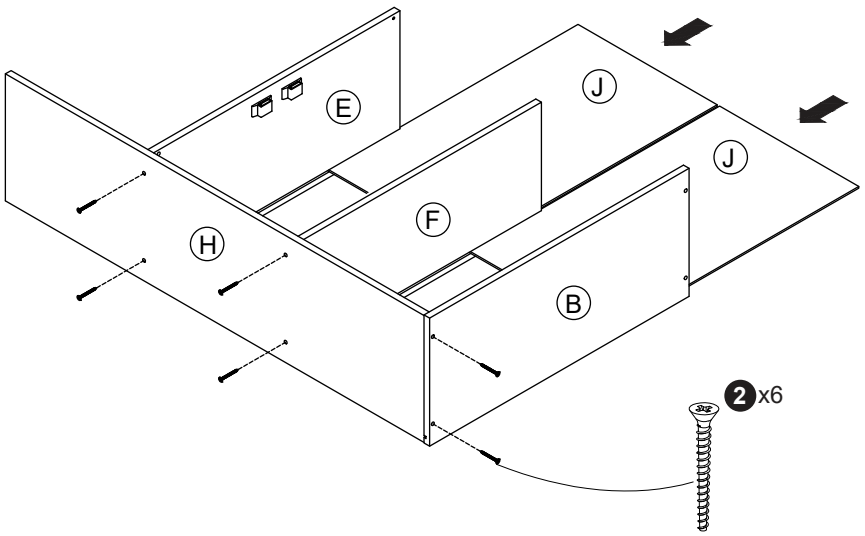

8

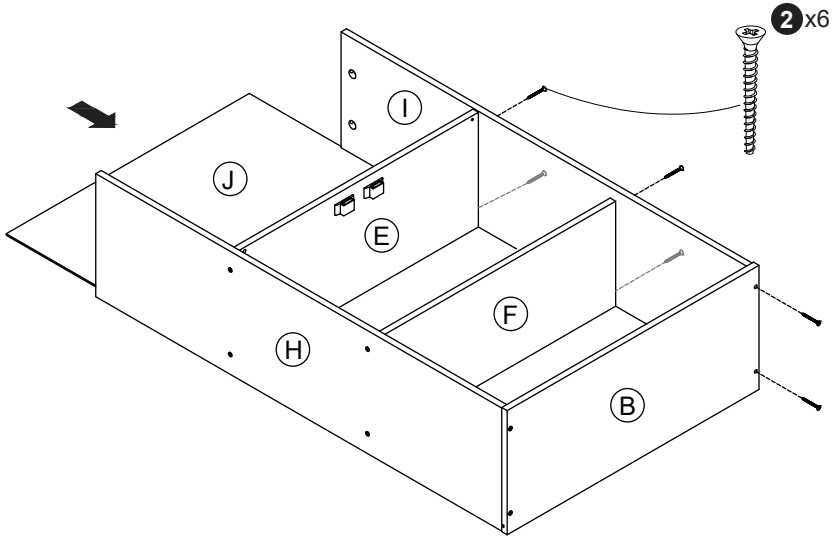

1

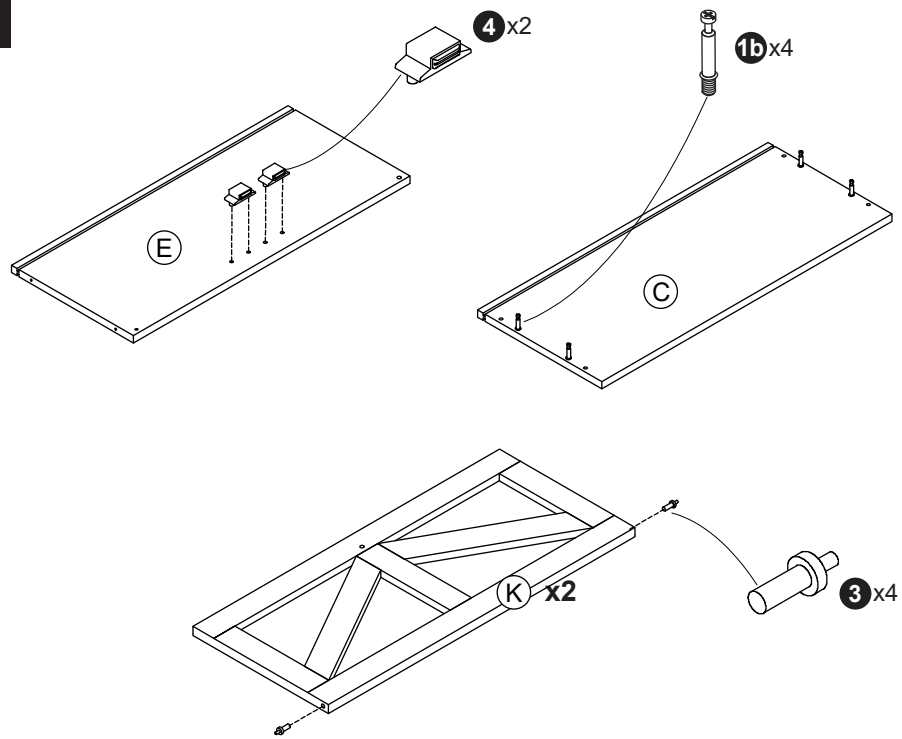

2

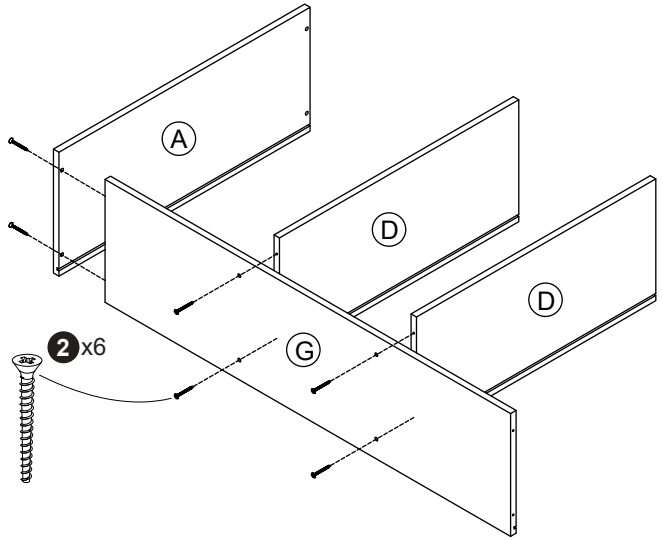

3

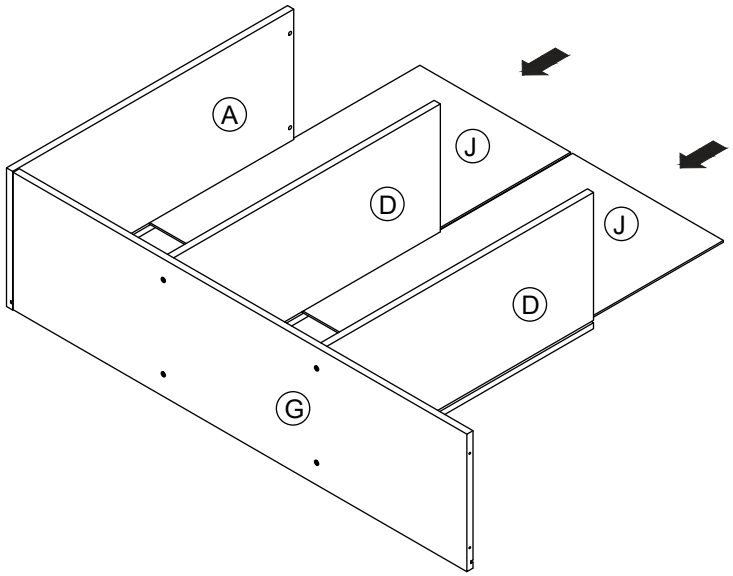

4

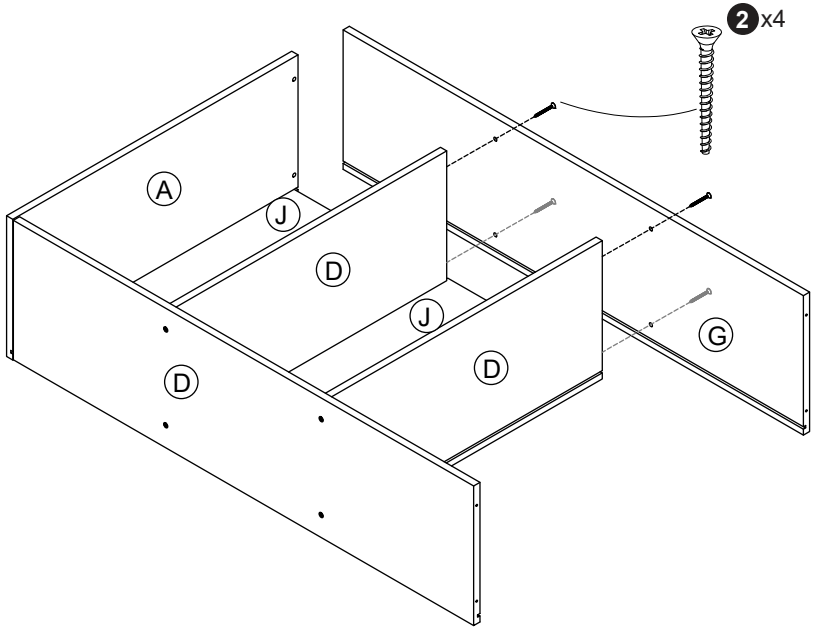

5

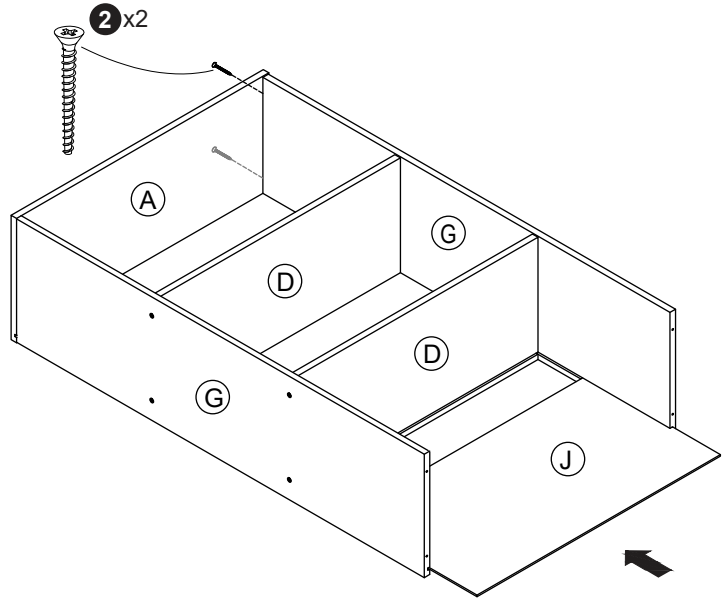

6

