4

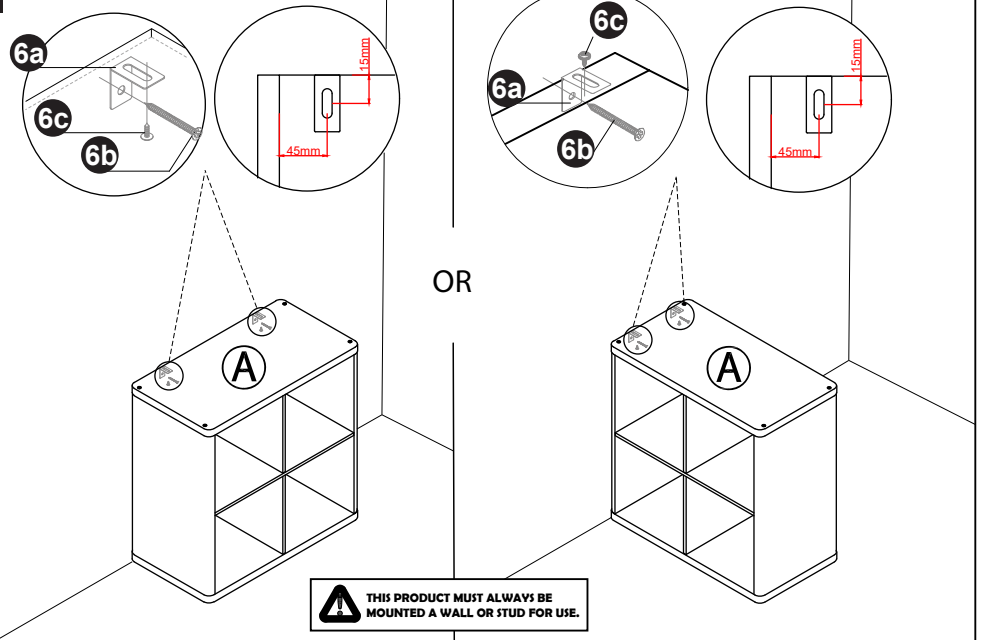

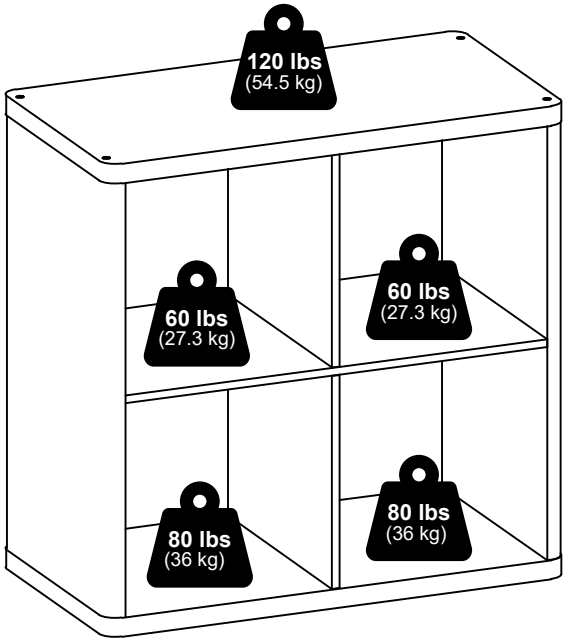





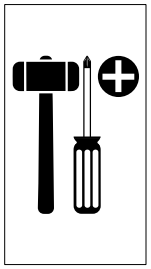

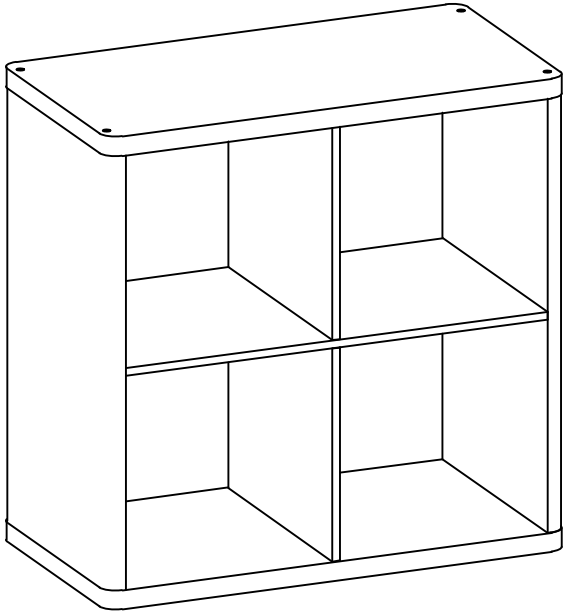

THIS PRODUCT MUST ALWAYS BE MOUNTED A WALL OR STUD FOR USE.

MODEL: 26004

2600420260403

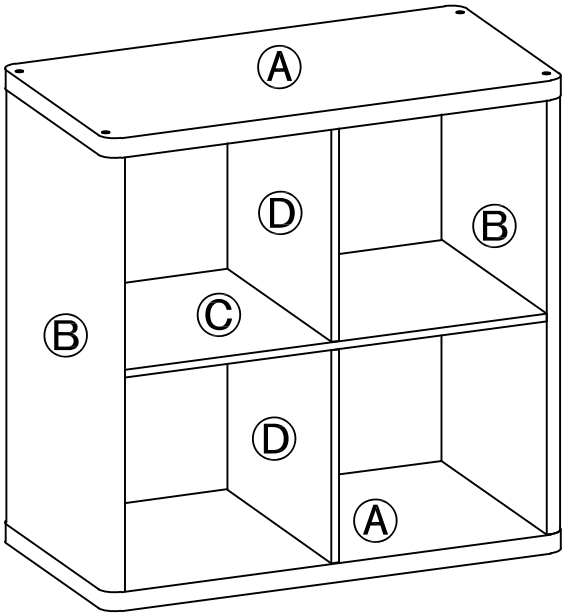

1 x 1 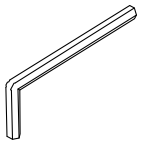	2 x 8 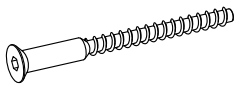 M7 x 75mm	3 x 2 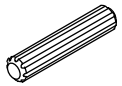 M5 x 50mm
4 x 8 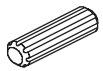 M5 x 30mm	5 x 8 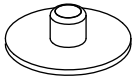	6 x 2 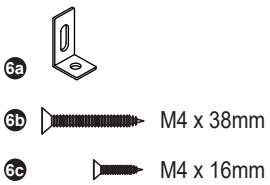

1

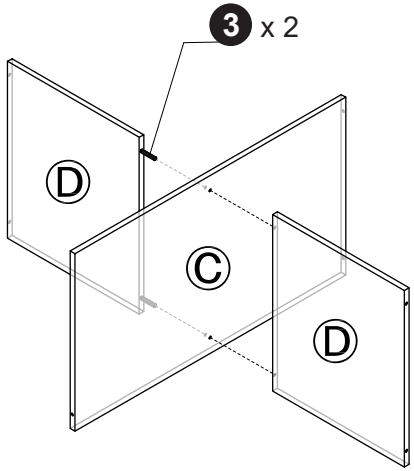

2

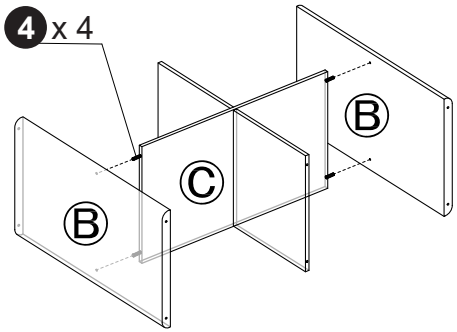

3

