6

THIS PRODUCT MUST ALWAYS BE MOUNTED A WALL OR STUD FOR USE.

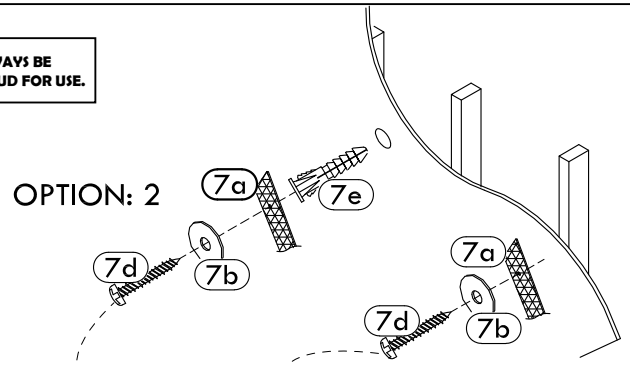

OPTION: 1

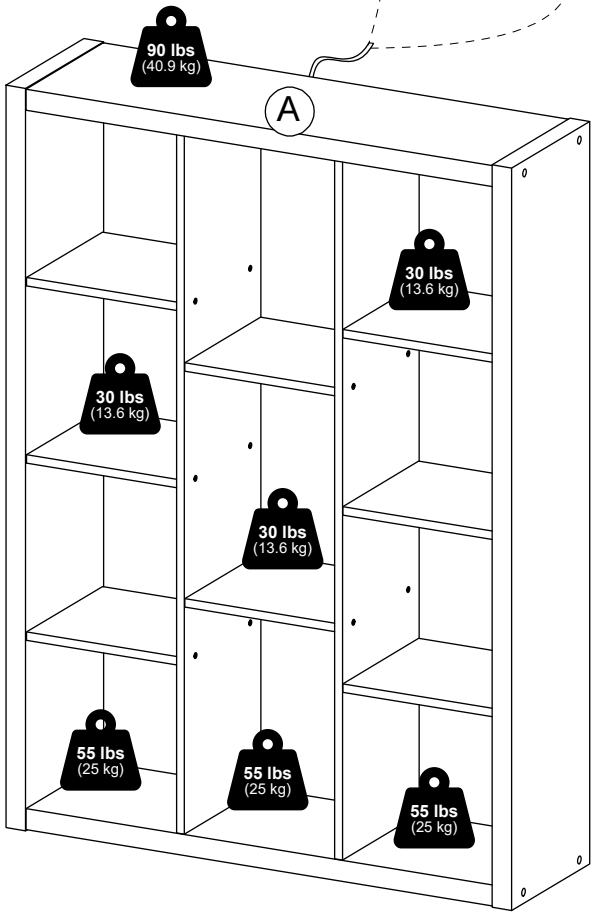



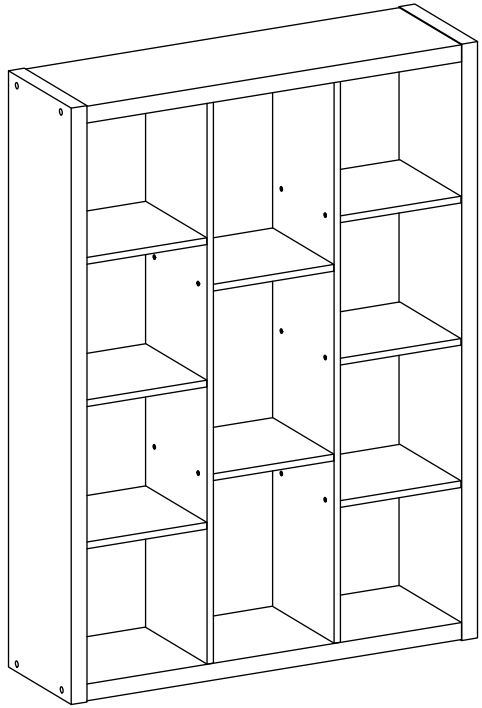

THIS PRODUCT MUST ALWAYS BE MOUNTED A WALL OR STUD FOR USE.

MODEL: 26023

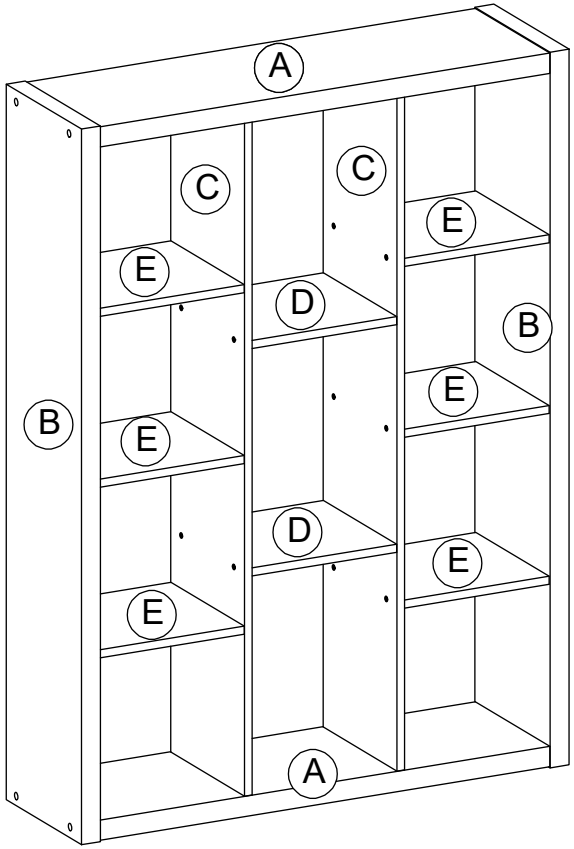

1 x 12	2 x 12	3 x 8	4 x 1
		M7 x 75mm	
5 x 8	6 x 20	7 x 1	8 x 8
	M4 x 32mm		

5

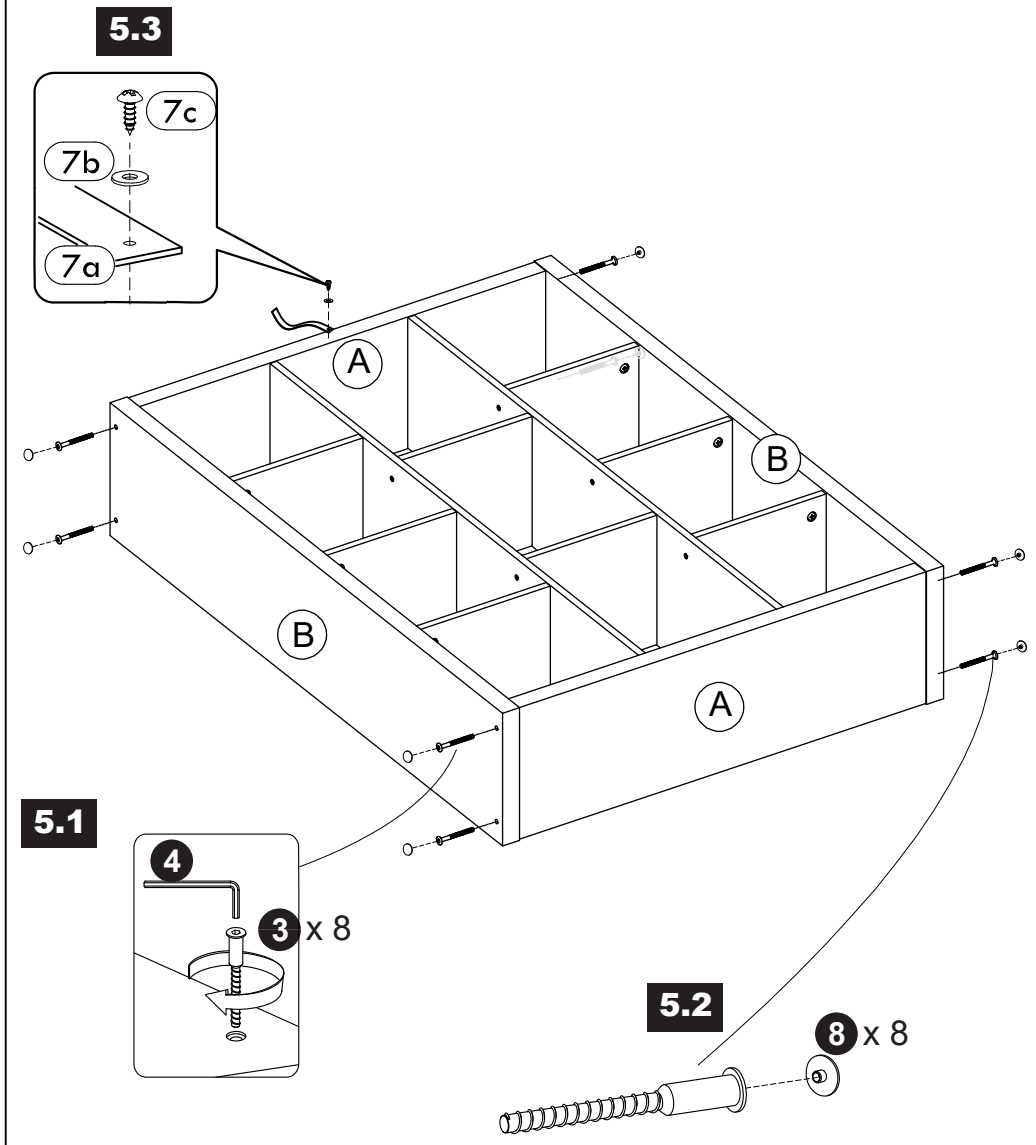

4

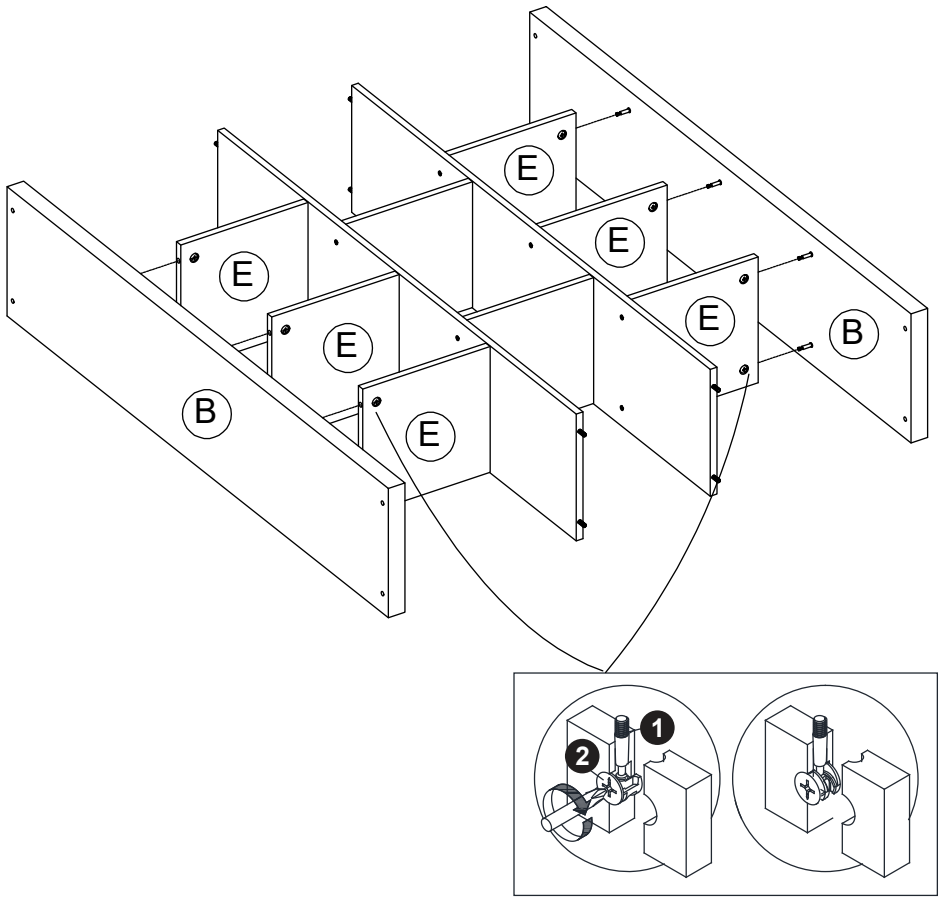

1

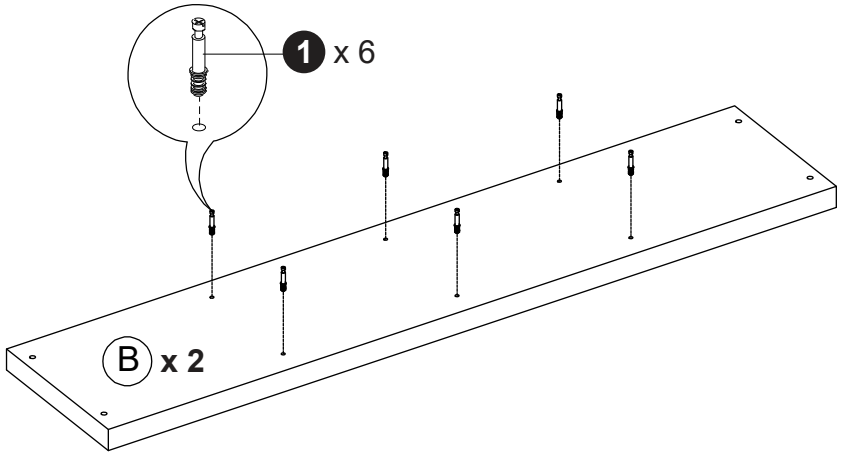

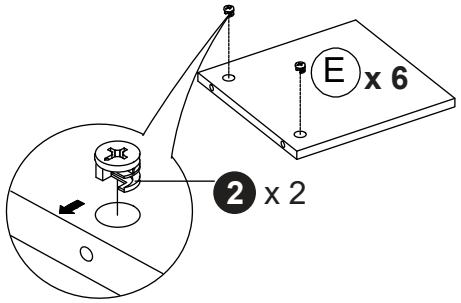

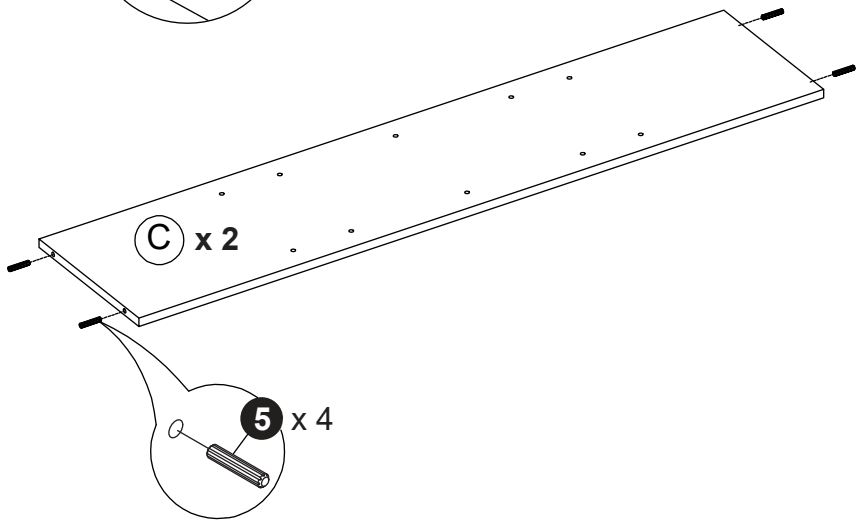

2

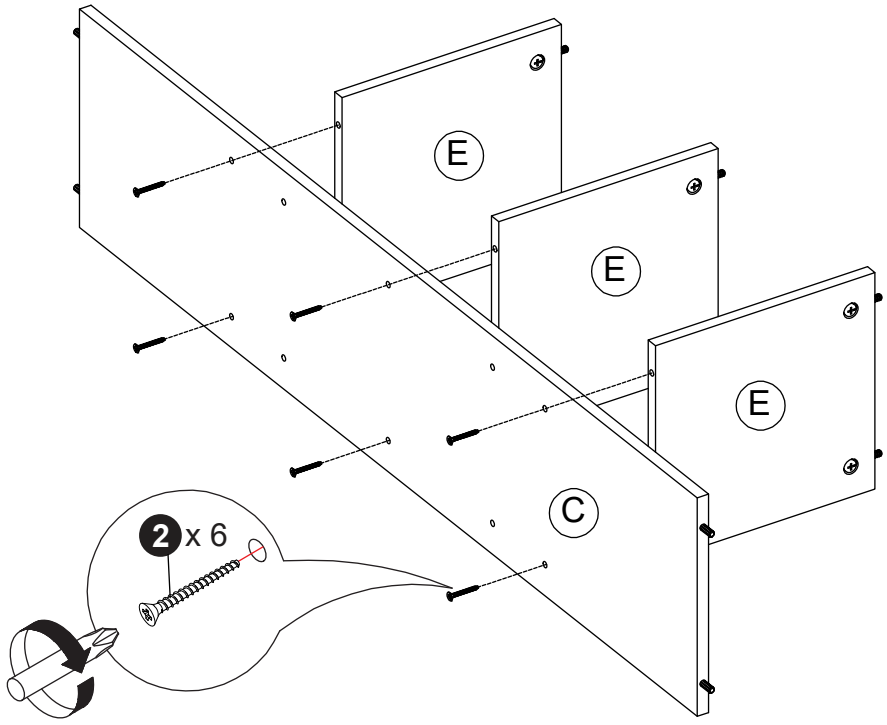

Repeat x 2

3

