9

THIS PRODUCT MUST ALWAYS BE MOUNTED A WALL OR STUD FOR USE.

OPTION: 2

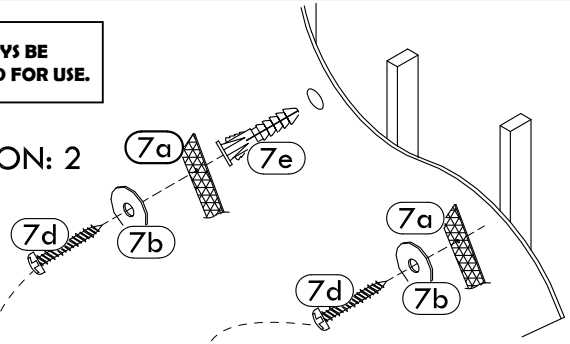

OPTION: 1

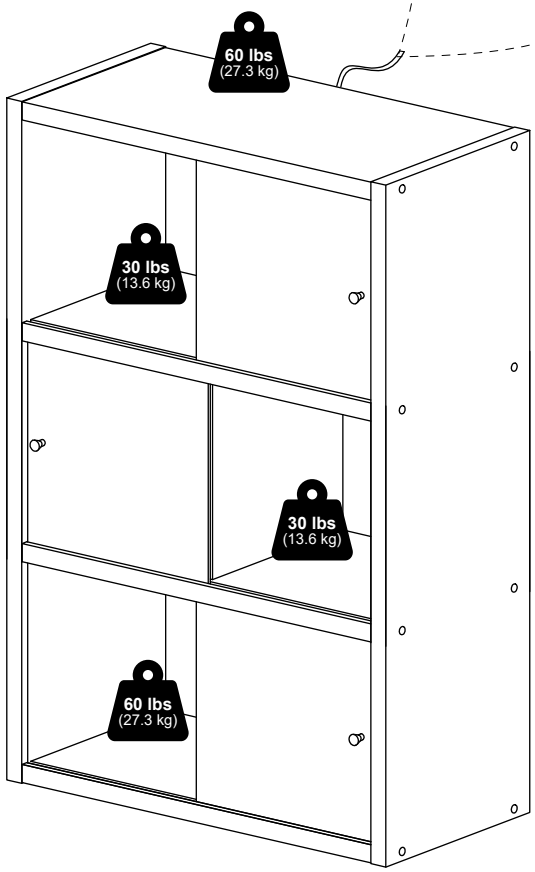





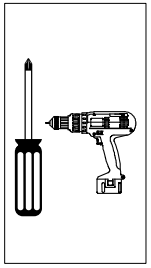

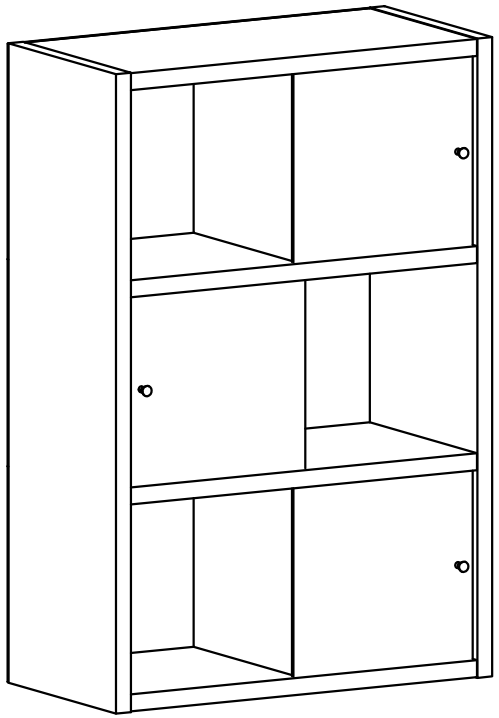

THIS PRODUCT MUST ALWAYS BE MOUNTED A WALL OR STUD FOR USE.

MODEL: 26041

2604120260409

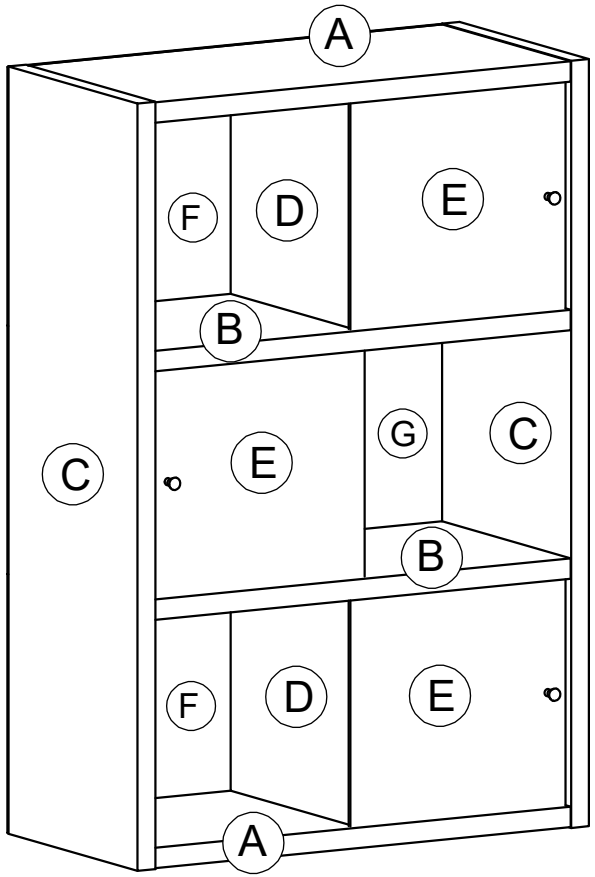

1 x 16 M7 x 75mm	**2** x 1	**3** x 3 M4 x 16mm	**4** x 3
5 x 48	**6** x 12 M5 x 30mm	**7** x 1	**8** x 16

8

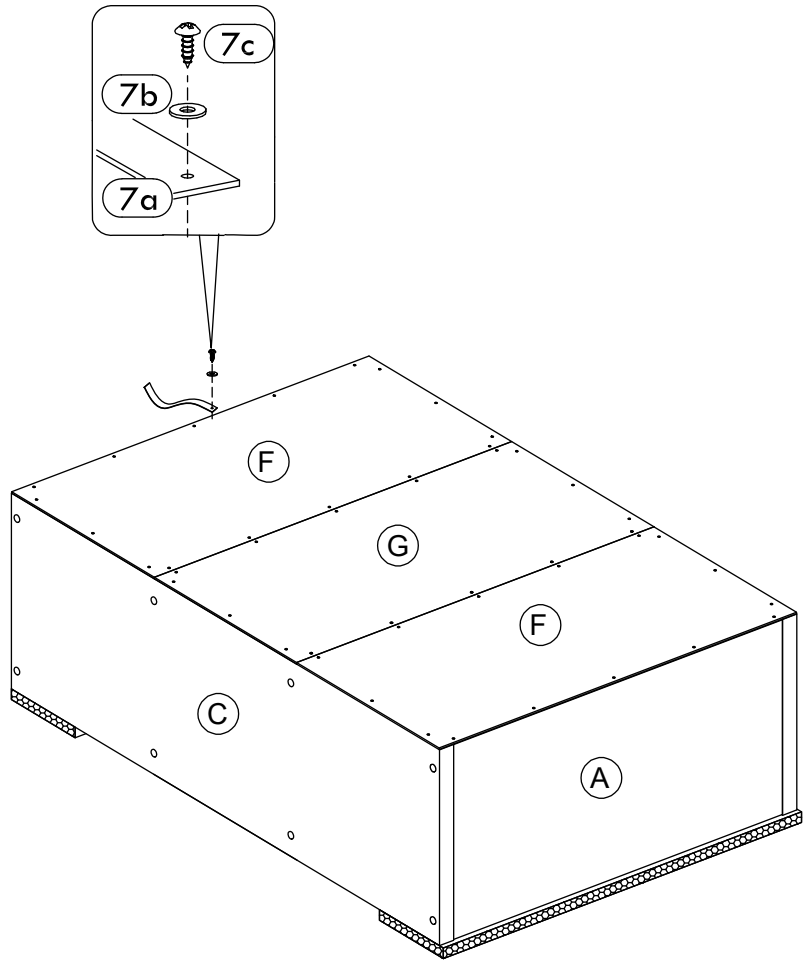

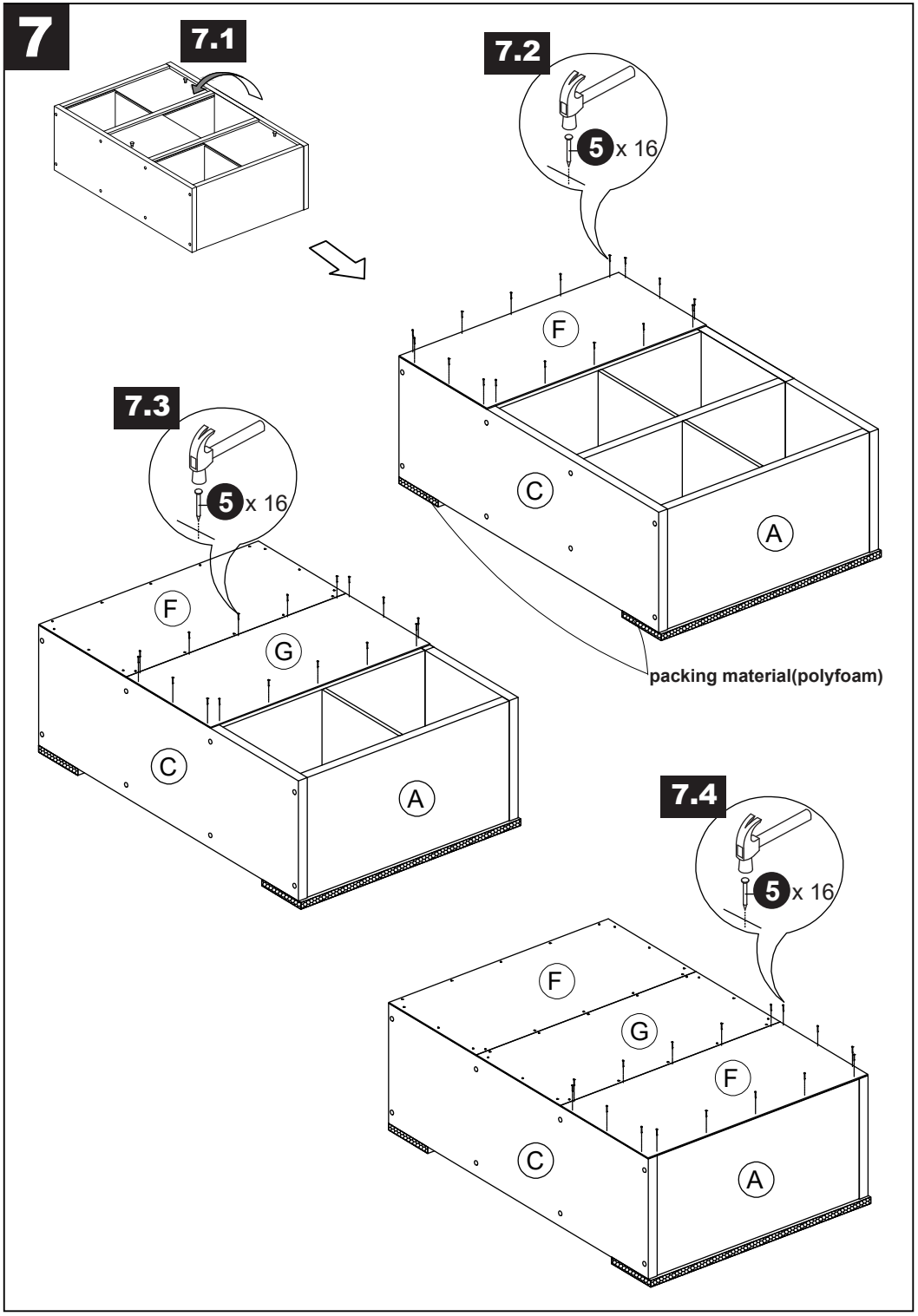
7
7.1
7.2
5 x 16
F
C
A
packing material(polyfoam)
7.3
5 x 16
F
G
C
A
7.4
5 x 16
F
G
F
C
A

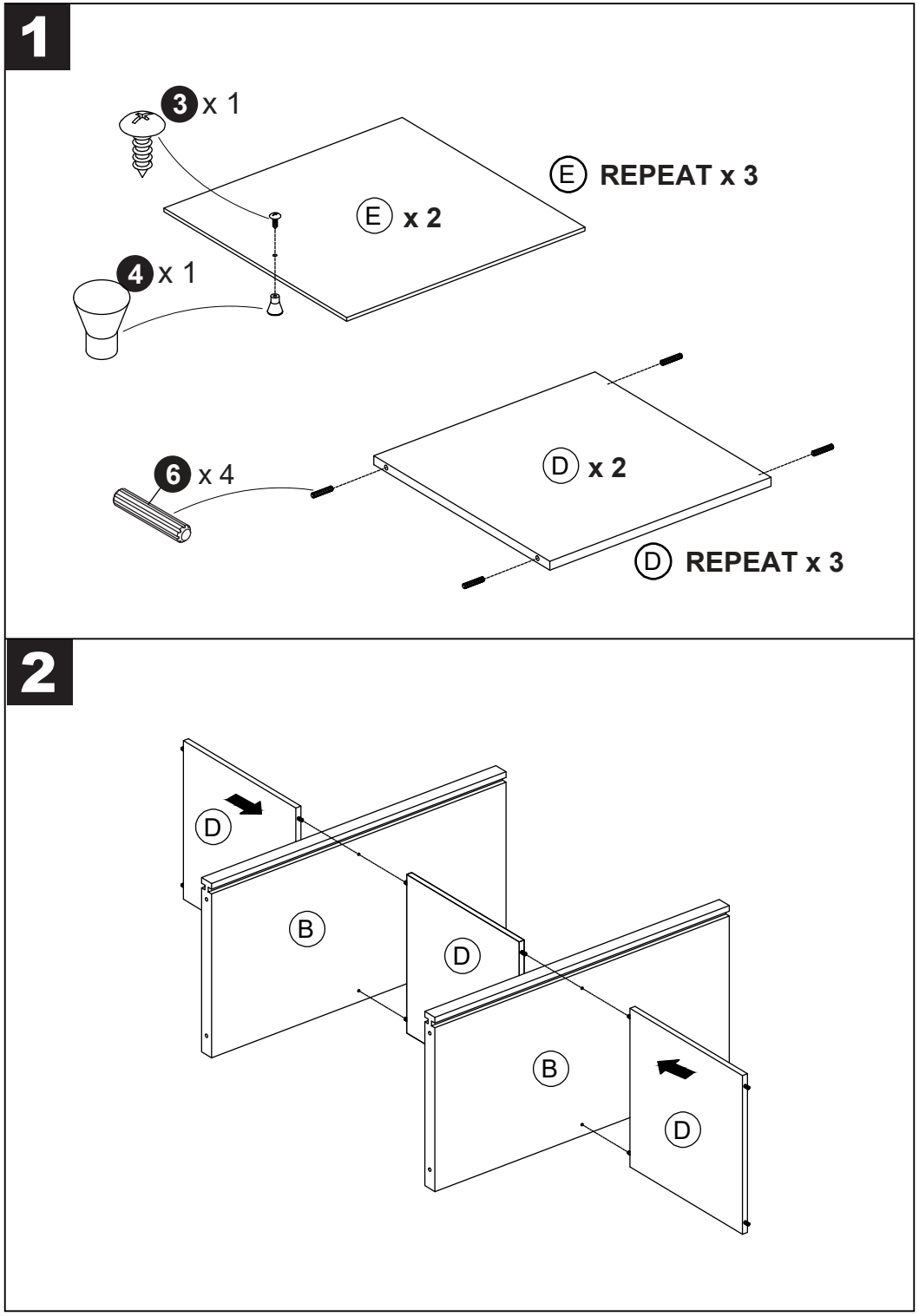
1
3 x 1
E REPEAT x 3
E x 2
4 x 1
6 x 4
D x 2
D REPEAT x 3
2
D
B
D
B
D

3

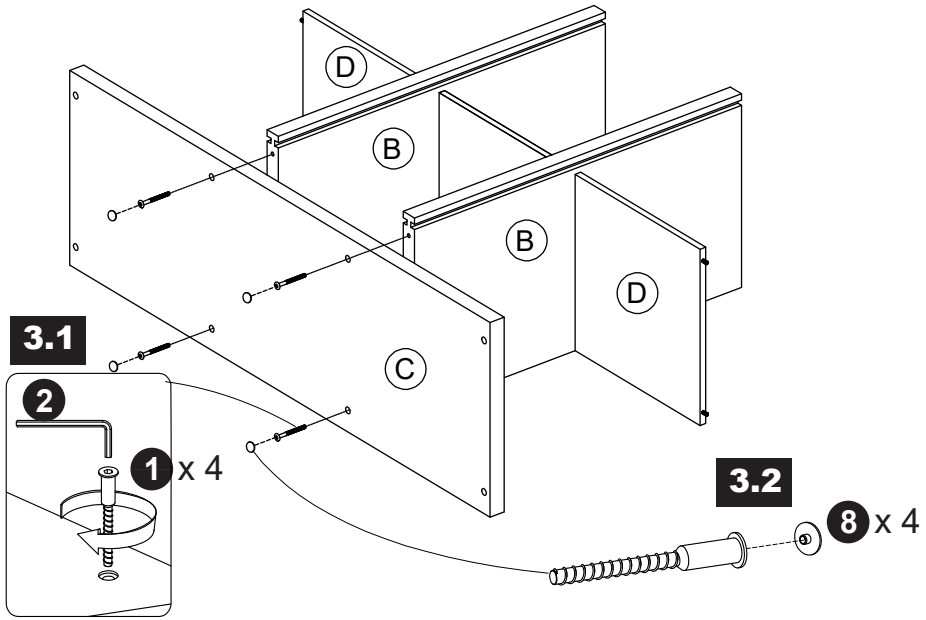
D
B
B
D
C
3.1
2
1 x 4
3.2
8 x 4

4

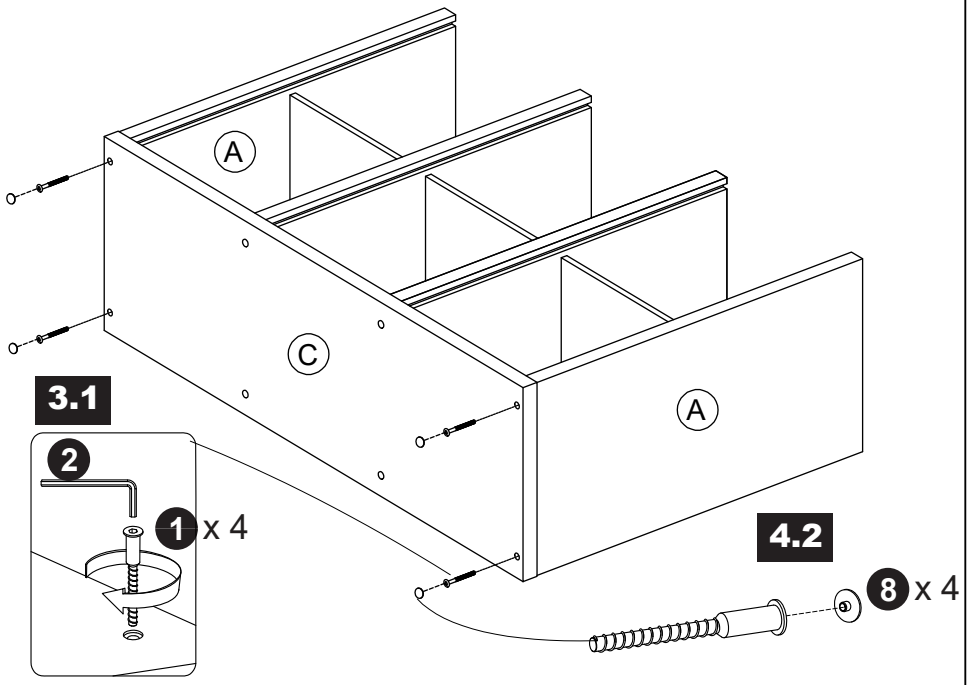
A
C
A
3.1
2
1 x 4
4.2
8 x 4

5

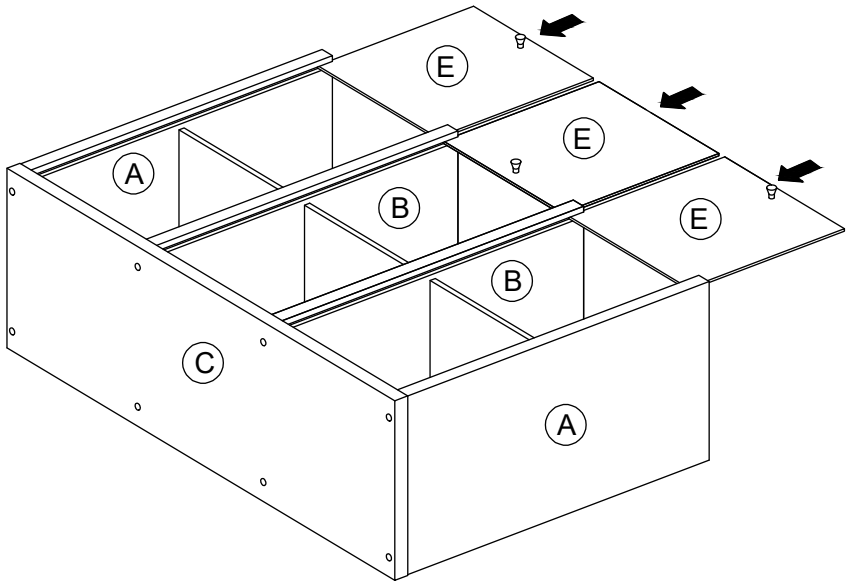
E
E
E
A
B
B
C
A

6

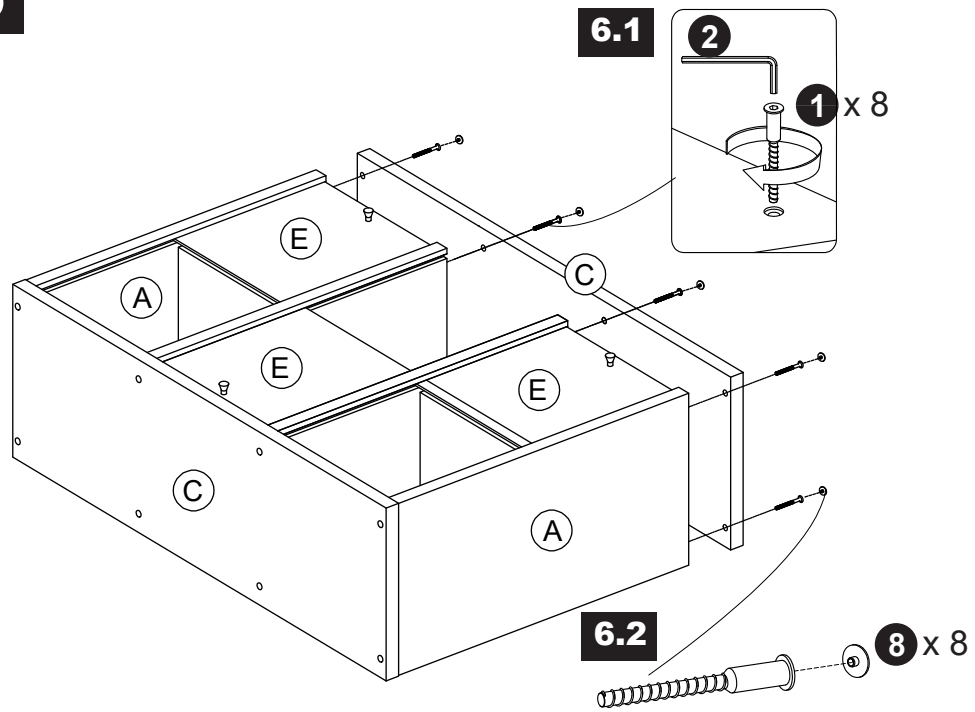
6.1
2
1 x 8
E
C
A
E
E
C
A
6.2
8 x 8