9

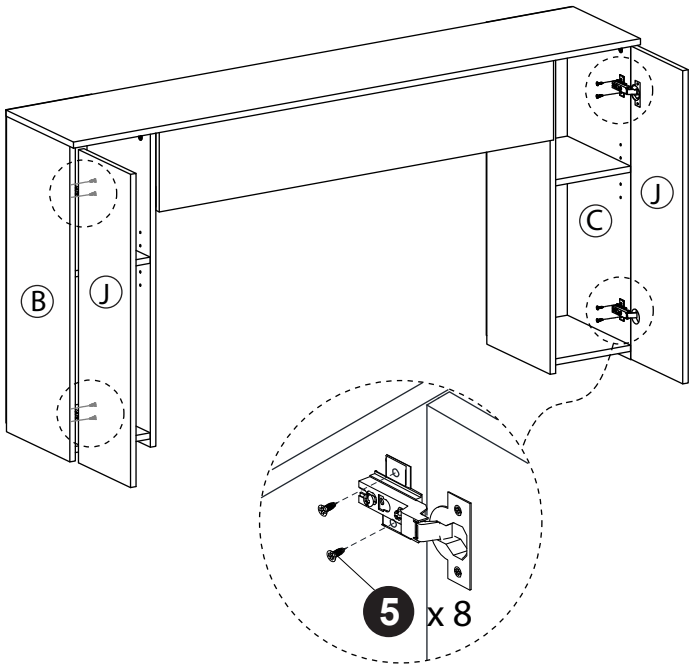

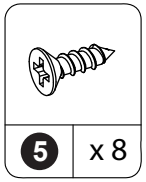

10

THIS PRODUCT MUST ALWAYS BE MOUNTED A WALL OR STUD FOR USE.

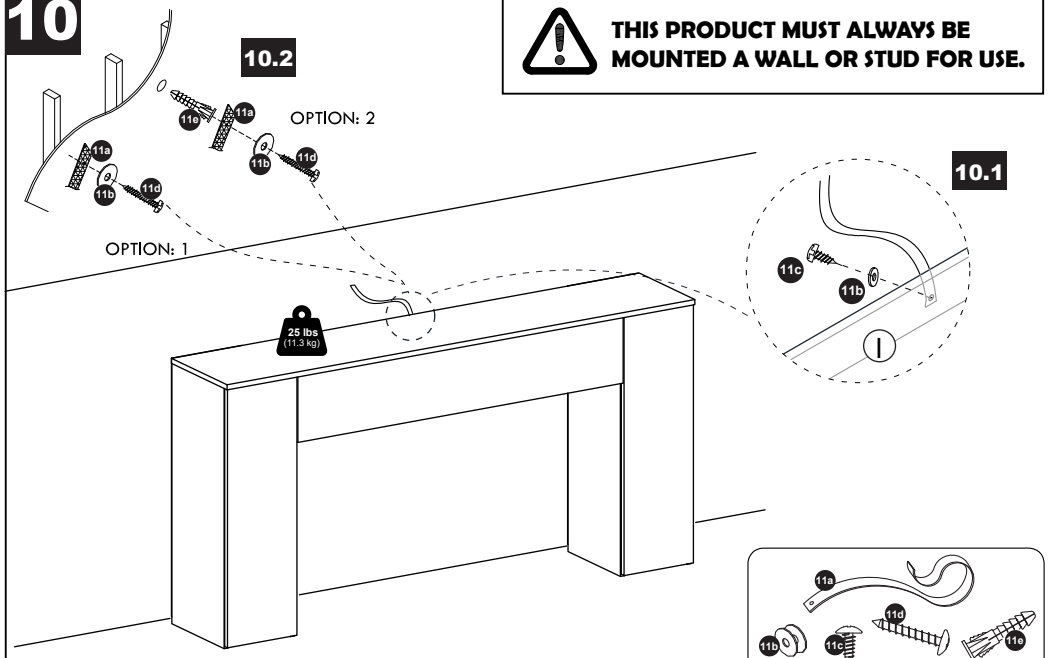



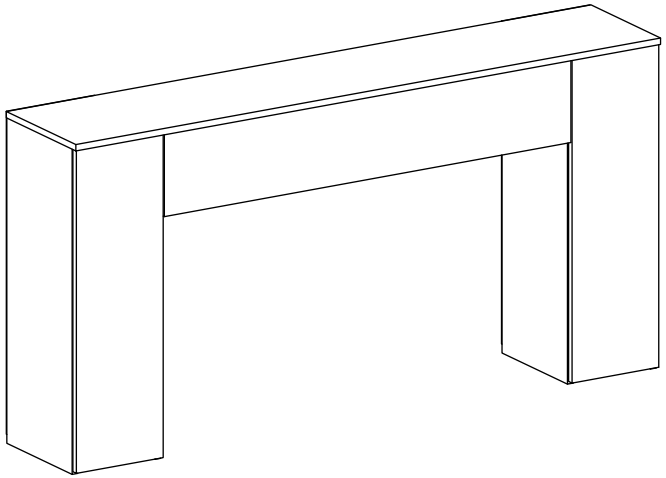

THIS PRODUCT MUST ALWAYS BE MOUNTED A WALL OR STUD FOR USE.

MODEL: 26042

2604220260714

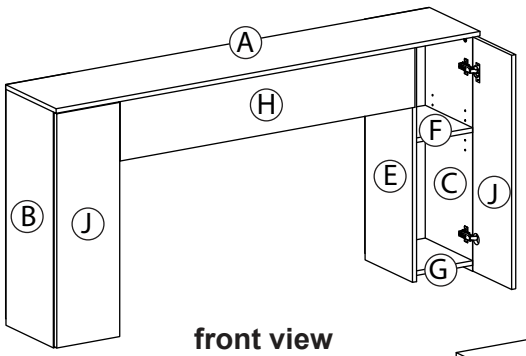

front view

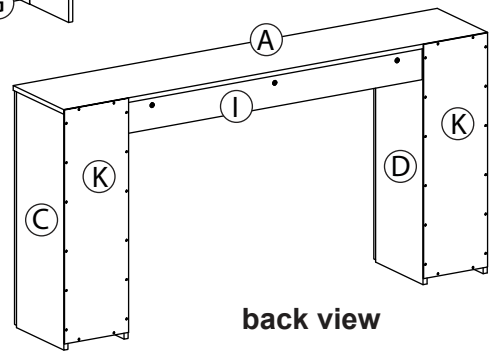

back view

1 x 22	**2** x 22	**3** x 22 M8 x 30mm	**4** x 4
5 x 16 M4 x 16mm	**6** x 8	**7** x 8	**8** x 1
9 x 8 M4 x 14mm	**10** x 4 M4 x 45mm	**11** x 1	
12 x 32	**13** x 2		

7

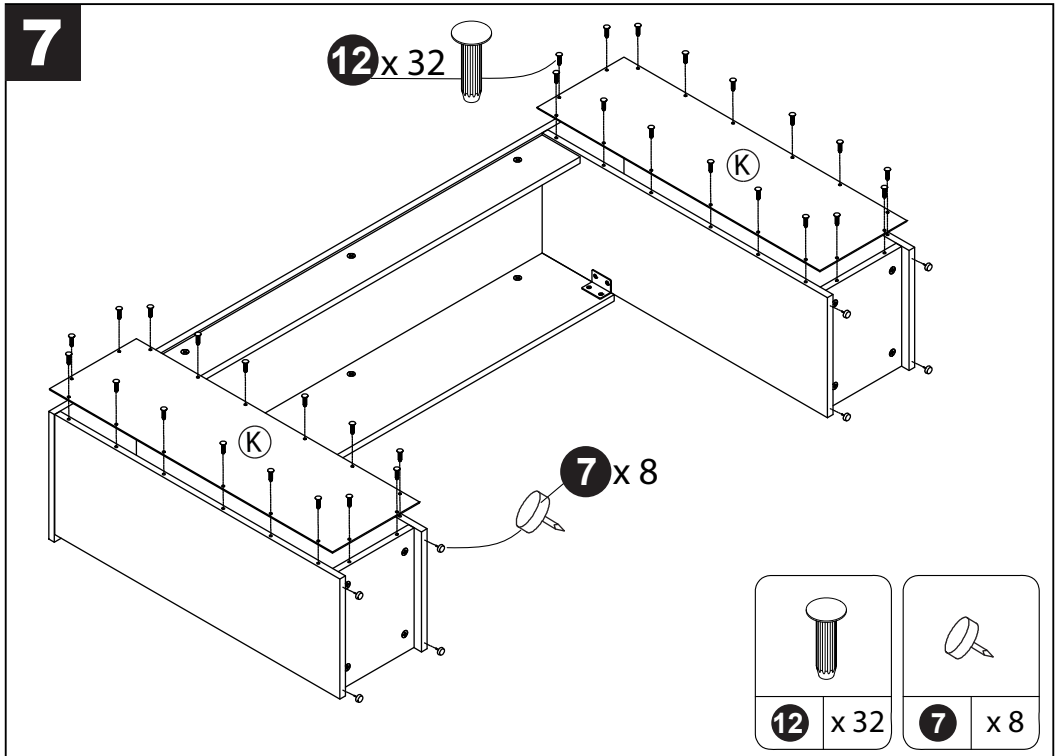

8

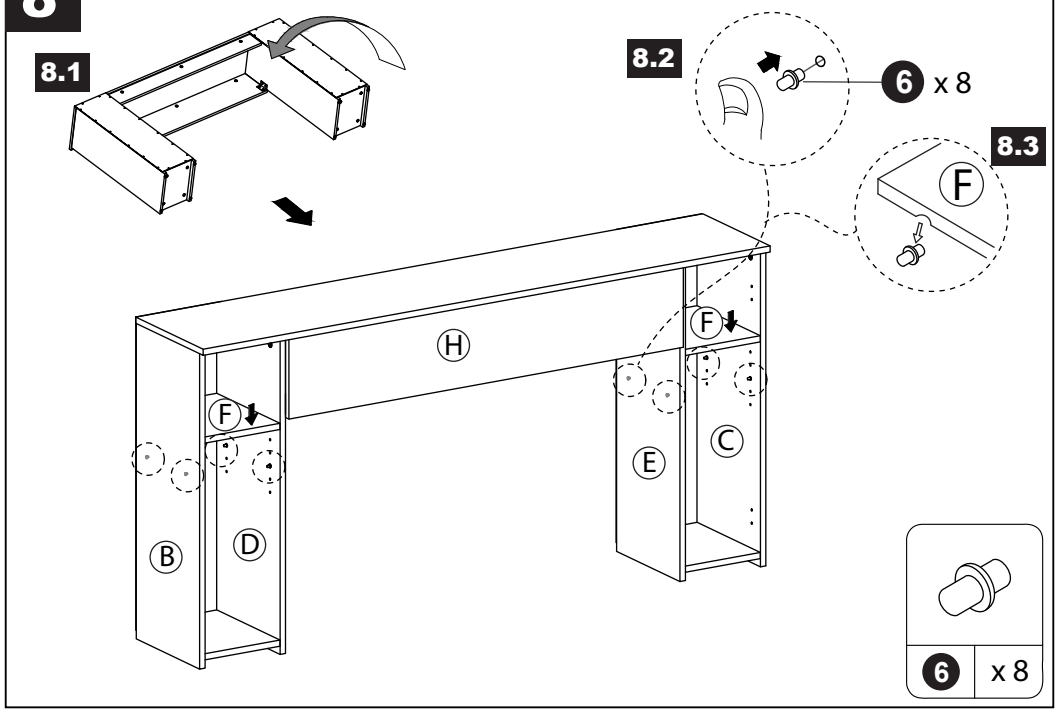

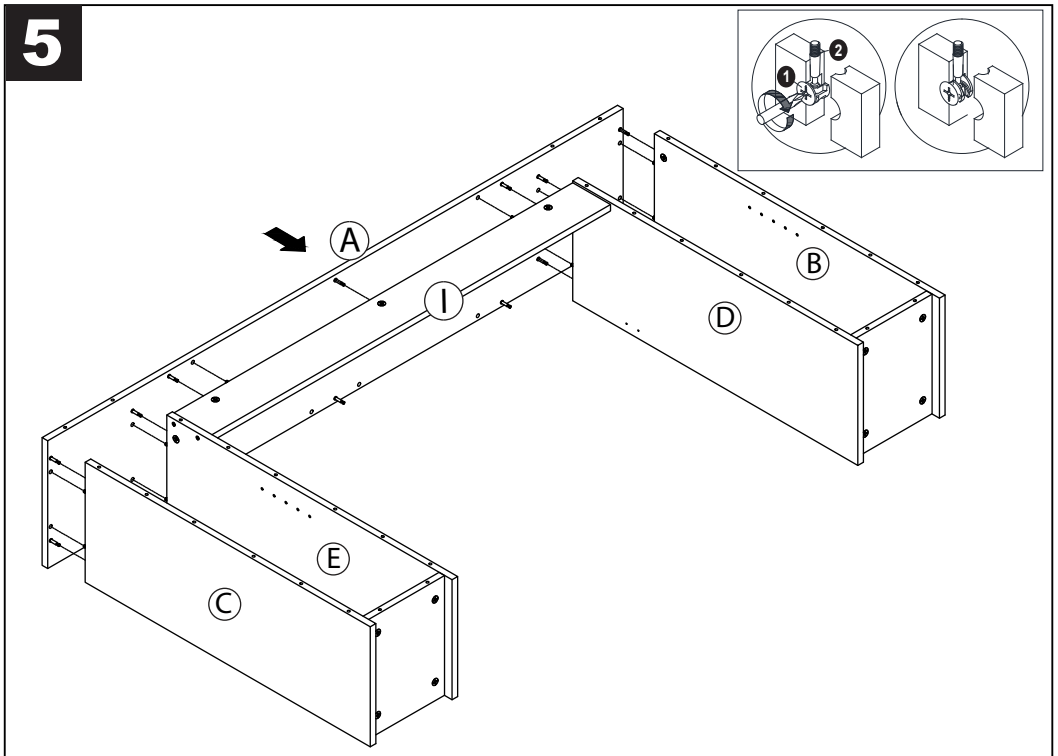
5
A
B
C
D
E
I
1
2

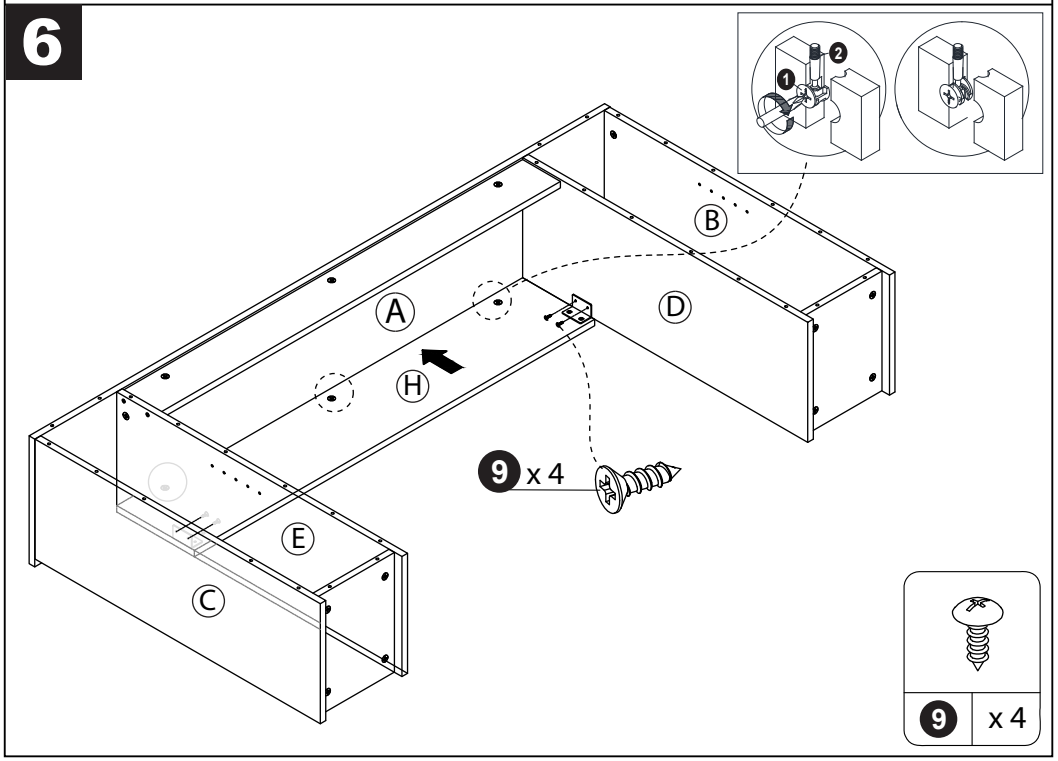
6
A
B
C
D
E
H
9 x 4
1
2
9 x 4

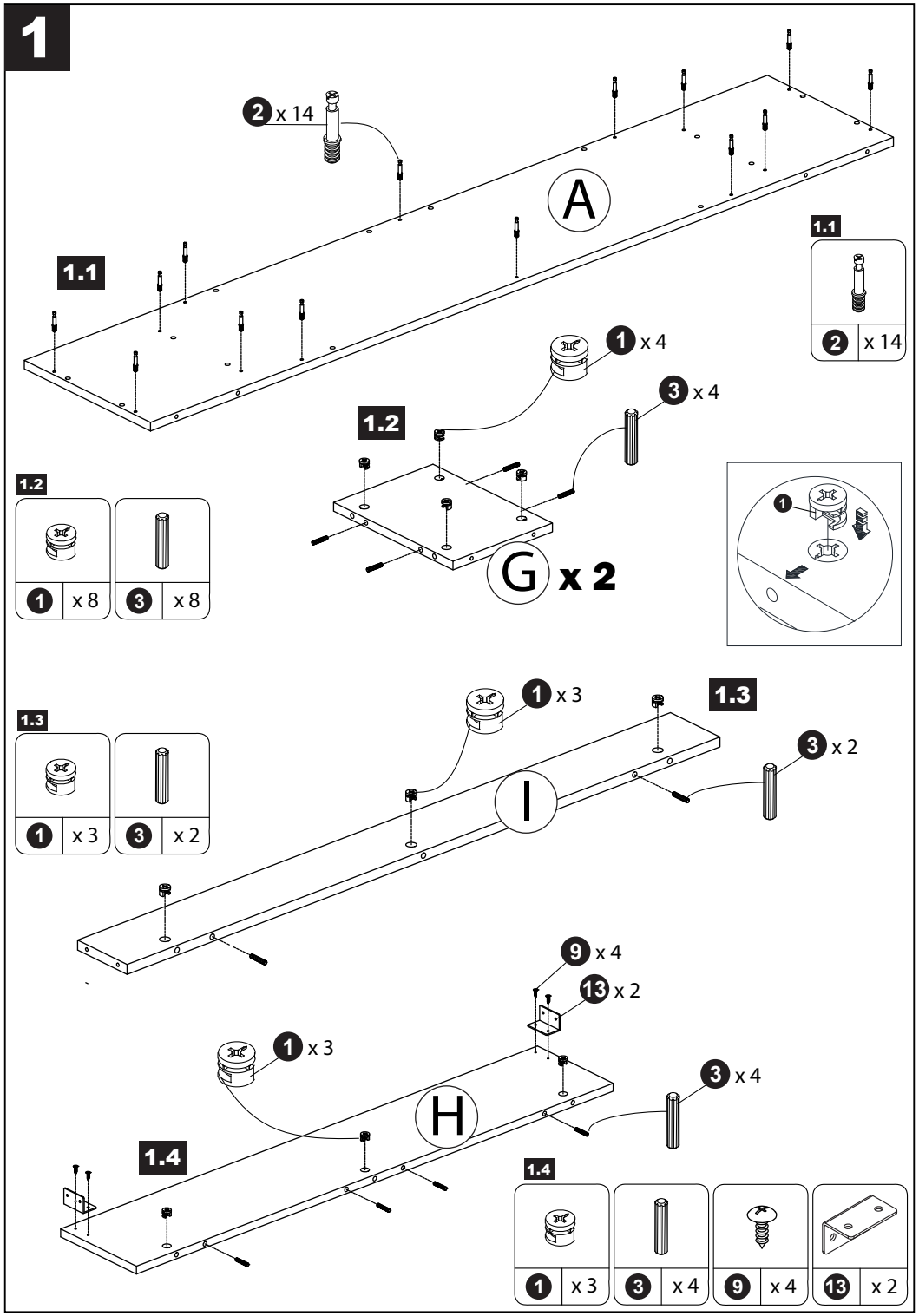
1
2 x 14
A
1.1
1.1
2 x 14
1 x 4
3 x 4
1.2
1.2
1 x 8
3 x 8
G x 2
1
1 x 3
1.3
1.3
3 x 2
I
1 x 3
3 x 2
9 x 4
13 x 2
1 x 3
3 x 4
H
1.4
1.4
1 x 3
3 x 4
9 x 4
13 x 2

2

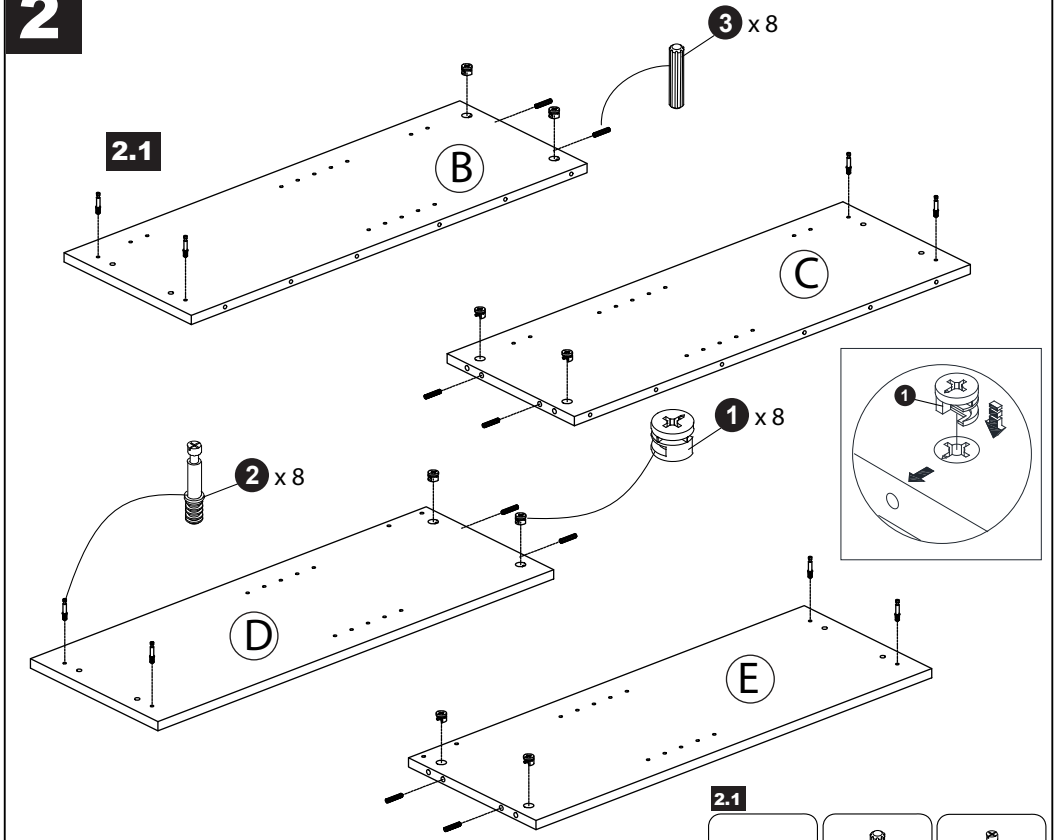
3 x 8
2.1
B
C
1 x 8
2 x 8
D
E

1

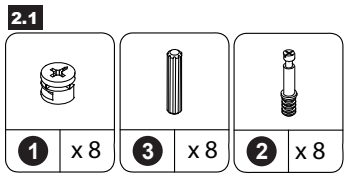
2.1
1 x 8
3 x 8
2 x 8

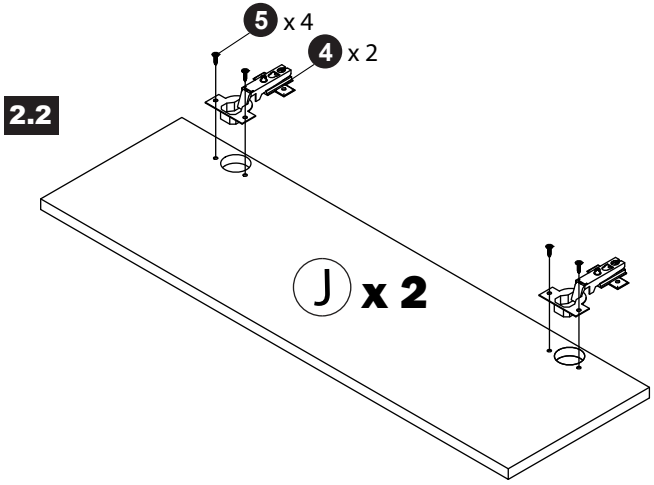
5 x 4
4 x 2
2.2
J x 2

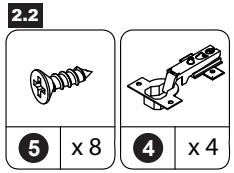
2.2
5 x 8
4 x 4

3

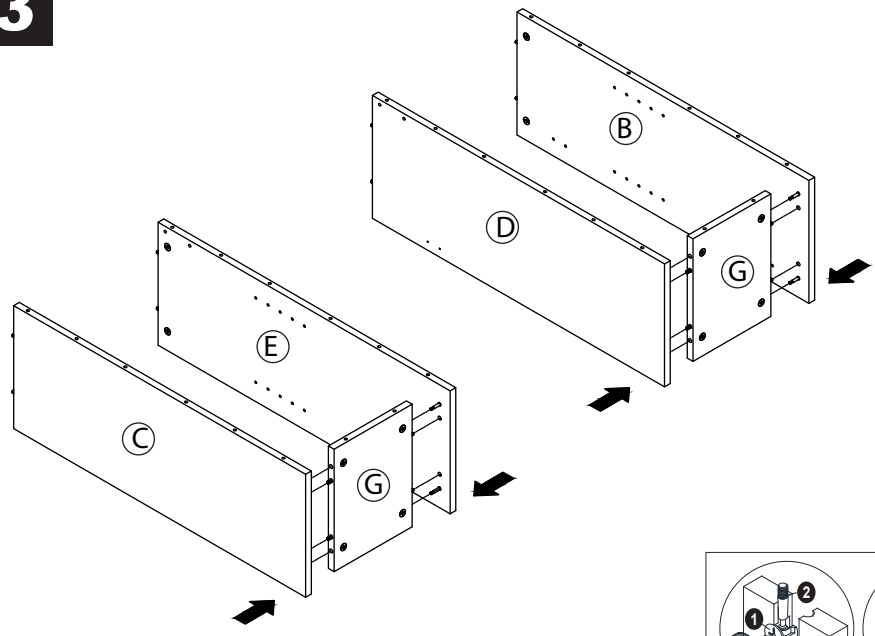
B
D
G
E
C
G

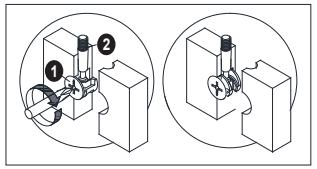
1
2

4

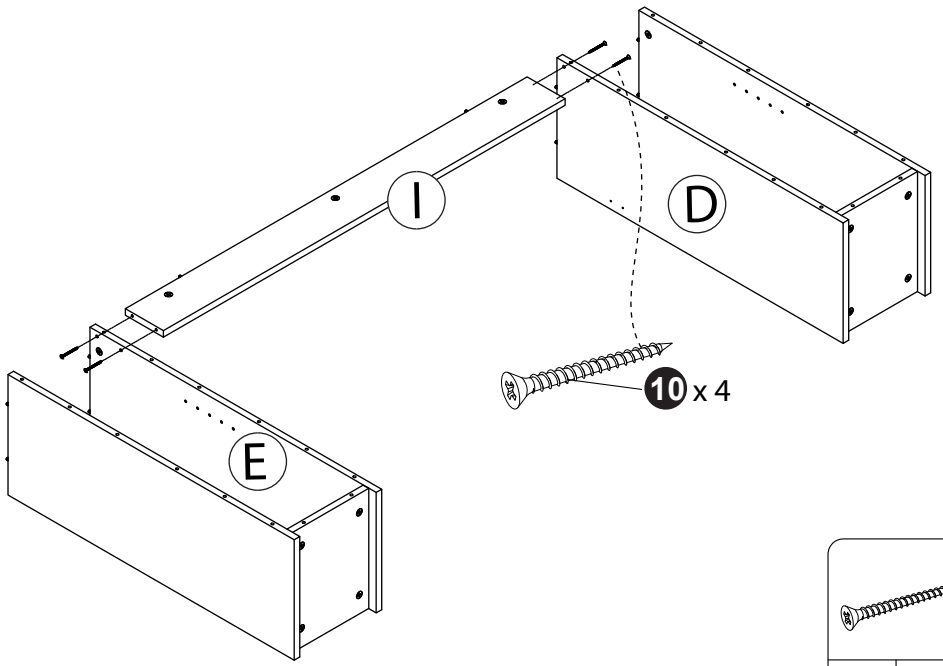
I
D
10 x 4
E

10 x 4